NEW YORK STATE | Adirondack Park Agency

KATHY HOCHUL
Governor

BARBARA RICE
Executive Director

In the Matter of the Application of

PETER AND KIM HOLDERIED

EXHIBIT LIST
November 3, 2026

APA Project No. 2024-0328

Exhibit A – P2024-0328 – Variance Application and Correspondence..... 0001

E-mail from Applicant dated July 21, 2024..... 0002

Jurisdictional Inquiry Form..... 0003

Jurisdictional Determination Letter..... 0012

DEC Notice of Incomplete Permit Application..... 0013

E-mail Correspondence between Applicant and DEC - August 2024..... 0014

Wetlands Site Visit Follow Up Letter..... 0016

Site Visit Photos..... 0018

E-mail from APA staff to Applicant dated September 19, 2024..... 0040

E-mail from Applicant to APA staff and DEC dated November 7, 2024.....0042

APA Variance Application received November 18, 2024..... 0043

E-mail from APA staff to Applicant dated November 19, 2024..... 0051

E-mail from APA staff to Applicant dated December 3, 2024..... 0055

Letter from APA staff to Applicant dated December 10, 2024..... 0056

Local Government Notice Form..... 0057

APA Variance Application received September 9, 2026..... 0059

E-mail from APA staff to Applicant dated September 10, 2026..... 0077

Appendix B dated September 14, 2026..... 0078

Public Notice - Variance Application Received dated September 14, 2026..... 0081

Letter from APA staff to Applicant dated September 29, 2026..... 0083

E-mail from Applicant to APA staff dated September 30, 2026..... 0084

E-mail from APA staff to Applicant dated October 1, 2026..... 0085

E-mail correspondence between APA staff and DEC - October 2026..... 0087

Essex County Real Property Report..... 0088

Exhibit B – P2024-0328 – Alternative Visuals..... 0091
Alternative A 0092
Alternative B 0093
Alternative C 0094
Alternative D 0095
Alternative E 0096
Alternative F 0097
Exhibit C – Public Notices 0098
Notice of Variance Hearing Letter to Applicant..... 0099
Notice of Variance Hearing Mailing..... 0102
Notice of Hearing (Lake Placid News) 0104
Affidavit of Publication..... 0105

Gmail

Rebuilding Moose Island Dock

Peter Holderied [redacted] Sun, Jul 21, 2024 at 12:43 PM
To: Peter Holderie[redacted]

Project Narrative

I own an existing camp at 12, George and Bliss Lane, Lake Placid Lake, N.Y.
Improvements include a 1,500 sq. ft. house and a 1,110 sq. ft. 2 slip dock.

This application involves removing the existing wood crib dock and replacing it with a
concrete filled casson foundation dock. A steel structure would be welded onto the cassons
and would accommodate a treated lumber wood frame.. Decking will then be installed to create a 2 slip boat dock.
The applications given to me by DEC staff have been completed along with property
drawings and before and after boat dock drawings. The new dock will be installed 20 ft.
from the westerly property line as is the existing dock.

My email is [redacted]

Thank You Peter Holderied

NEW YORK STATE OF OPPORTUNITY. | Adirondack Park Agency

JURISDICTIONAL INQUIRY FORM

Please submit by email to – apajif@apa.ny.gov

A. INSTRUCTIONS

Submit this form to obtain a written determination whether an Adirondack Park Agency permit or variance is needed for a proposed project. This form is not an application. If you know you need an Agency permit or variance you should not submit this form, but instead you should contact the Agency for the appropriate application form. Information about Agency jurisdiction can be found on the Agency's website (https://www.apa.ny.gov/) and in the Agency's 'Citizen Guide,' which is also available on the website.

The Jurisdictional Inquiry Form must be signed by a person with a legal interest in the property; only owners, tenants, mortgagees, purchasers under an existing contract of sale, or their attorneys. Please note that if the person under contract to purchase the property signs this form, then a copy of the purchase agreement signed by both parties must be provided.

The legal issues involved in determining jurisdiction are complicated. All of the information requested on this form is necessary in order for us to determine if the proposal requires an Agency permit or variance. The County Clerk's Office, Real Property Tax Services and/or the Town Office may be able to assist you in obtaining property information (tax map number, history, copies of deeds, etc.).

Please include a copy of the current recorded deed, tax map number, a description of your proposal, including a sketch map, and the necessary signature(s).

WE CANNOT RESPOND TO YOUR INQUIRY WITHOUT THIS INFORMATION

B. GENERAL INFORMATION

	APPLICANT/REPRESENTATIVE:	PROPERTY OWNER (if not applicant):
Name	Peter Holderied	Same
Mailing Address	[redacted]	
Telephone		
Email		

PROPERTY LOCATION:

Town/Village North Elba County Essex

Road/Highway Lake Placid Lake

Tax Map Number: (This can be found on your tax bill and it looks something like this… 89.12-1-1.4 - three numbers separated by dashes, and there may not be decimals).

Section 33.15-1-5.100 Block _____ Parcel/Lot _____

C. PROPERTY HISTORY

Please include a copy of the current recorded deed for the property

1. Has the property been the subject of any previous Agency permit, variance, map amendment, jurisdictional determination, staff site visit, wetland site visit, or an enforcement action?

   ☐ Yes ☒ No ☐ Don't Know

   If yes, please include the following information:

   File number _____ Agency contact _____

2. What is the acreage or square footage of the property at this time? 1.42 acre

3. Please describe all structures which currently exist on the property (include type and use of structure, size and construction date of each – for example, confirm if the structure is a mobile home, single family dwelling, barn, storage building, etc.). If your project involves replacement of a structure, please provide its description, even if it has already been removed (and indicate its removal date).

	Structure/Use	Size	Construction Date	Removal Date
a.	House	1,500 sq ft	1986-1990	
b.	Dock	1,110 sq ft	1990	
c.				
d.				
e.				
f.				

D. PROJECT DESCRIPTION

Please check all that apply and fill in the appropriate blanks:

1. ☐ Subdivision
   (a) Number of proposed lots (including any lots being retained). _____
   (b) What is the size of the smallest lot in acres or square feet? _____
   (c) What is the smallest shoreline lot width (if applicable)? _____
   (d) Are any of the proposed lots being conveyed by gift? ☐ Yes ☐ No
   If yes, what is the recipient's relationship to the person giving the lot?

   _____

   ☐ Construction of a single family dwelling.
   ☐ Installation of a mobile home.
   ☐ Construction of a multiple-residence building (_____ housing units).
   ☐ Construction of a commercial, industrial or public building resulting in _____ square feet of building footprint and _____ square feet of floor space (total of all floors).
   ☒ Expansion of the footprint of an existing 1,110 square foot structure by 341 additional square feet. For group camps and public buildings, please also provide expansion information for the total of all floor space. **NOTE:** If you are expanding a structure other than a single-family dwelling, also provide the total square footage of the structure as of May 22, 1973.

   Boat Dock

   ☐ *Proposing to install, replace or expand a seepage pit, drainage field or other leaching* facility.
   Will it be within 100 feet of the mean high water mark of any lake, pond, river or stream (including intermittent streams)? ☐ Yes ☐ No
   Will the new system serve an actual or potential occupancy increase of the shoreline structure served? ☐ Yes ☐ No
   ☒ Replacement of an existing 1,110 square-foot structure with a new 1,451 *square-foot structure. Confirm the existing and proposed use of the structure.*

   _____
   ☐ Conveyance of entire ownership
   ☐ Other (describe)

2. Does the project involve establishment of a new business? ☐ Yes ☒ No

   If yes:
   (a) Will it be operated at your residential property? ☐ Yes ☐ No
   (b) How many people will the business employ who do not live on the premises?

   _____
   (c) How many signs will the business have? _____
   Will they be lighted? ☐ Yes ☐ No
   What will be the combined square footage of the sign(s)? _____
   (d) Please describe the type of business. _____

3. Provide the height of the proposed structure(s) (measuring from the highest point of a structure including chimney to the lowest point of natural or finished grade, whichever is lower.) 12" above high water mark

(If the structure is close to 40 feet in height, it will be necessary to provide building elevations [all sides] and a grading plan which shows existing and proposed grade to obtain a jurisdictional determination.)

4. Will the project result in the removal of sand, gravel, topsoil or minerals from the property?
☐ Yes ☒ No

5. Will waste material, such as construction debris, be disposed on the property? (This does not include soil and land clearing debris generated from onsite construction activities.)
☐ Yes ☒ No If yes, explain the type and volume of debris.

_____

6. Does the property contain shoreline? ☒ Yes ☐ No
What will be the distance from the mean high water mark to the closest new structure or expansion? _____ feet
If an expansion, how far from the mean high water mark is the existing structure? _____ feet

Will the existing roof ridgeline height be increased by more than 2 feet? ☐ Yes ☐ No
If yes, what is the proposed new ridgeline height in feet above the existing ridgeline height? _____ feet

7. Will any vegetation be cut within 35 feet of a lake, pond, river or stream? ☐ Yes ☒ No
Your sketch should show the size and type of vegetation to be removed relative to the size and type which will remain.

8. Does the proposal involve provision of any new or additional deeded or contractual access to the shoreline? ☐ Yes ☒ No If yes, provide the number of new or additional lots being provided access (identify by tax map designation) and the width of the access area.

E. SKETCH MAP

(For the purposes of this Inquiry the map does not need to be professionally prepared)

On a separate sheet, provide a scaled sketch map of the property showing acreage, boundaries, and natural features and water bodies. Include the location of all existing and proposed development **(including structures, on-site wastewater treatment system, water supply, driveways, roads, and areas of clearing etc.)** It should be drawn at a scale which clearly shows the location of all proposed activity, with measurements labeled. For a shoreline parcel, show the lot width along the shoreline and indicate the setback distance from mean high water mark of any existing or proposed structure and sewage system. Also, provide the north arrow, the name of the map maker and date it was prepared.

F. **NARRATIVE** (Please describe your proposal)

Narrative included in documents

G. **CHECK LIST**

- [x] Have you answered all of the questions?
- [ ] Did you include a copy of the current recorded deed?
- [x] Did you include a sketch map?
- [x] Is the form signed by an authorized person?
- [x] Did you provide the tax map identification number?
- [x] Did you include your return mailing address and phone number?

H. SIGNATURE OF AUTHORIZED PERSON

Note: This form must be signed by a person with a legal interest in the property; only owners, tenants, mortgagees, purchasers under an existing contract of sale, or their attorneys. The use of an electronic signature, by typing in your signature and checking below, shall have the same validity and effect as a handwritten signature. Please fill in the information below and check all applicable boxes.

The above information is correct and accurate to the best of my knowledge.

[signature]
Signed (typed)

Haldesried — Last Name
Peter — First Name
W — Middle Initial

Owner — Title (if applicable)

8/9/24 — Date

By submitting this form, I hereby request the Adirondack Park Agency issue a written determination as to whether an Adirondack Park Agency permit or variance is needed for a proposed project.
I attest that I am the person named above and that I am the:

Check one:

- [x] Owner of the property subject to this jurisdictional inquiry (If signing this form on behalf of other entities (e.g, LLCs) please provide documentation showing you are authorized to do so.)
- [ ] Attorney for owner of the property subject to this jurisdictional inquiry
- [ ] Purchaser of the property subject to this jurisdictional inquiry under an existing contract of sale (a copy of which is attached)
- [ ] Tenant of the property subject to this jurisdictional inquiry under an existing lease (a copy of which is attached)
- [ ] Mortgagee of the property subject to this jurisdictional inquiry (a copy of which mortgage is attached)

If you wish to have a representative process this inquiry on your behalf, please provide their name and address on page one of this form.

_____ **(initials) I authorize the representative listed on page one of this form to act on *my behalf for this inquiry*.**

I. PLEASE SUBMIT BY EMAIL TO – apajif@apa.ny.gov

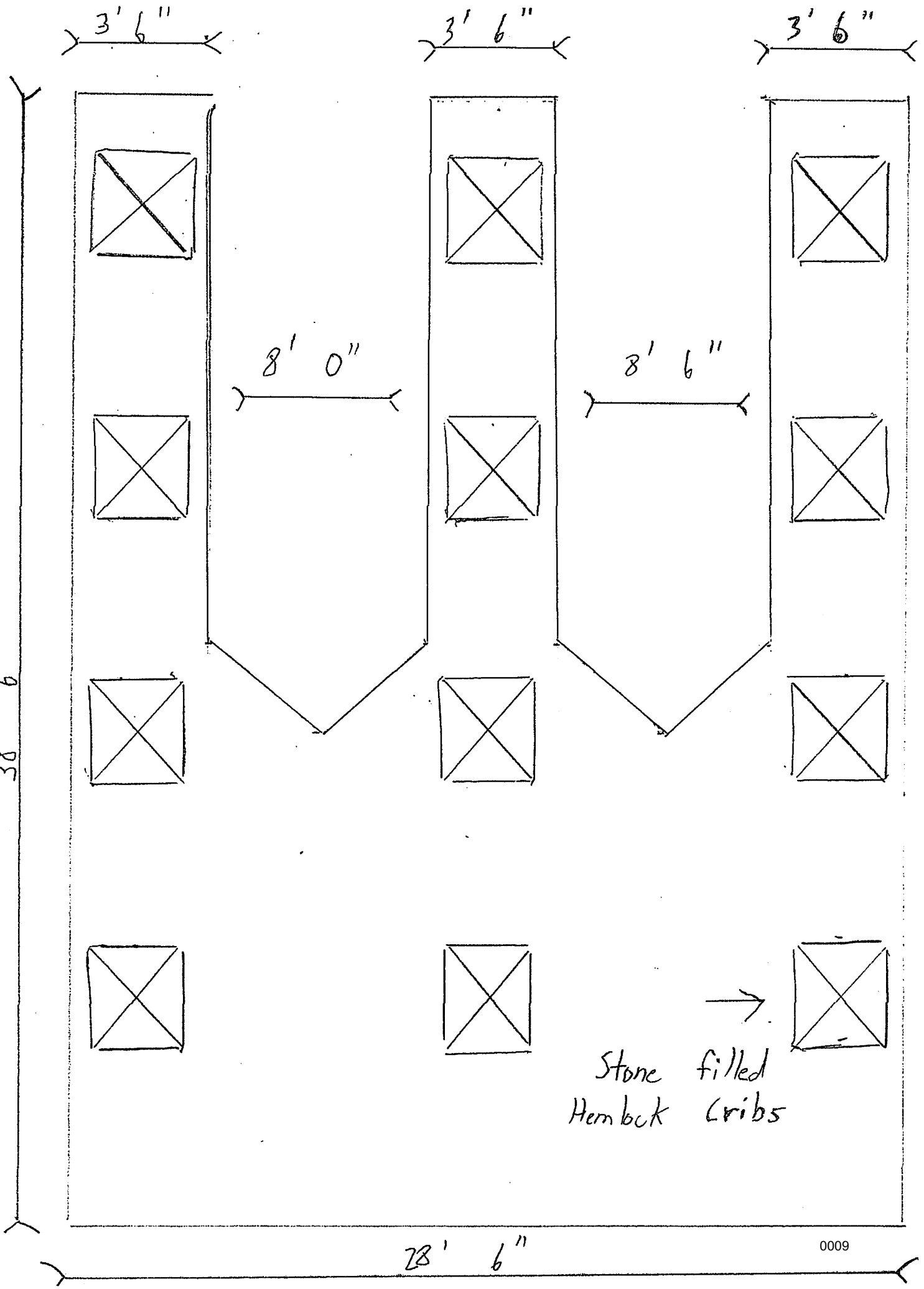
3' 6"
3' 6"
3' 6"
8' 0"
8' 6"
38' 6"
28' 6"
Stone filled
Hemlock Cribs

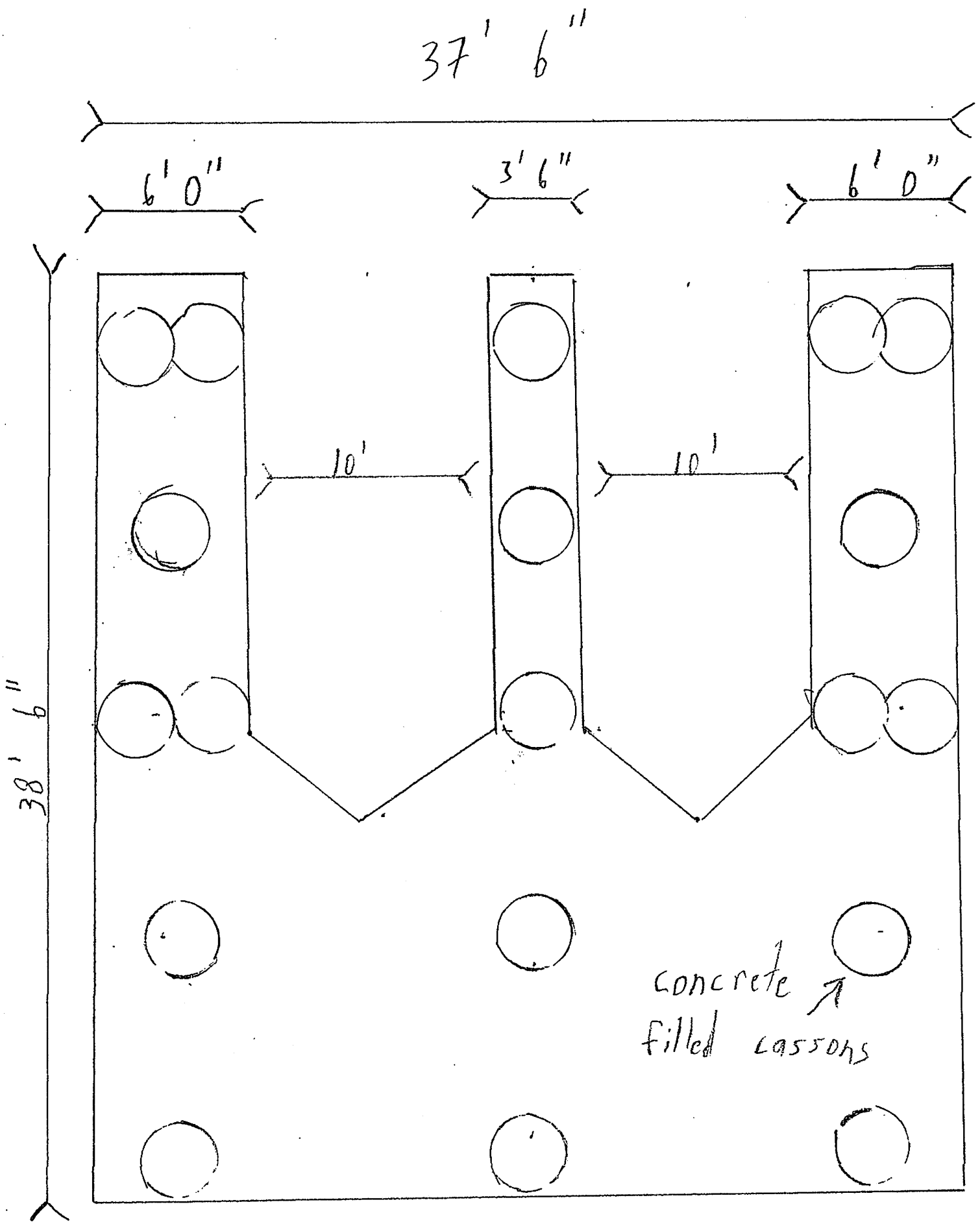
37' 6"
6' 0"
3' 6"
6' 0"
38' 6"
10'
10'
concrete filled caissons



NEW YORK STATE OF OPPORTUNITY. | Adirondack Park Agency

KATHY HOCHUL
Governor

BARBARA RICE
Executive Director

August 12, 2024

Peter Holderied – Via Email to [redacted]

RE: Jurisdictional Determination J2024-0742
Tax Map Parcel: 33.15-1-5.100
Land Use Area: Rural Use
Town of North Elba, Essex County

Dear Peter Holderied:

Thank you for your Jurisdictional Inquiry Form, received by the Agency on August 9, 2024.

Pursuant to §806 of the Adirondack Park Agency Act, a variance is required from the Agency for the construction of any structure greater than 100 square feet in size within 75 feet of the mean high water mark of any lake on Rural Use lands in the Adirondack Park. Pursuant to Agency regulations at 9 NYCRR Part 575, a variance is required prior to the expansion of an existing structure within the shoreline setback area, including through any increase in the structure's footprint, width, or height. Accordingly, expansion of the non-conforming dock described in your Inquiry requires a variance from this Agency. The enclosed flyer further explains the Agency's shoreline restrictions.

Please be aware that there may be additional reasons for Agency jurisdiction over the proposed project. No portion of the project may be undertaken, including through the commencement of any grading, clearing, excavation, construction of a road, conveyance of a subdivision lot, etc., without the required Agency approval.

If you wish to pursue a variance for your proposal, please see the enclosed variance process document for additional information. Feel free to contact the Agency's Regulatory Programs Division at the telephone number listed below with any questions. Thank you for your cooperation.

Sincerely,

/s/ Matthew Brown

Matthew Brown
Project Administrator

Attachments: Shoreline Restrictions Flyer; Variance Process Summary

cc: Town of North Elba – Via Email

New York State Department of Environmental Conservation

Notice of Incomplete Application - This is NOT a Permit

Application ID: 5-1540-00478/00001 *Batch Number*: 1025531

Facility: Moose Island Camp-Peter Holderied
12 George and Bliss Ln Pier 410|S Side Moose Island
North Elba, NY 12946

Applicant: PETER HOLDERIED *Owner ID*: 23343
18 HIGHLAND PL
LAKE PLACID, NY 12946

Permit(s) Applied for: 1 - Article 15 Title 5 Excavation & Fill in Navigable Waters

Project Location: in NORTH ELBA in ESSEX COUNTY

Your application for Permit is incomplete. The following items are required:
1) List of other agencies having jurisdiction over project.
2) Further detail on application

Additional Information:

1. Adirondack Park Agency (APA): Your project is located within the Adirondack Park, and as such, may require a permit or approval from the APA. An August 8 letter from the APA indicated requested a Jurisdictional Inquiry Form from you. In accordance with our Uniform Procedures Act Regulations (6NYCRR Part 621.3(a)(10), if your project is jurisdictional by the APA, then your DEC permit application will remain incomplete until such time as the APA has a complete application. For further information regarding the APA's jurisdiction, please contact the APA at (518) 891-4050.

2. Additional information is needed to continue processing your application:
a. What are the diameter of the proposed caissons?
b. What are your plans for the crib stone from the old dock foundation?
c. What are the dimensions of the dock area on the land side of the dock (both the existing and proposed dock)?
d. How far from shore is the new dock proposed to be built? Please show the shoreline and proposed connection to shoreline (such as a gangway) on the project plans.

Please submit requested information by 9-16-2024
No further action can be taken until all of these materials are received.

Contact Person:
BENJAMIN M SHUBERT
NYSDEC
1115 NYS ROUTE 86
PO BOX 296
RAY BROOK, NY 12977

Signature: Benjamin M Shubert

Date: August 16, 2024

From: Brown, Matthew B (APA)
To: Surita, Keri (APA)
Subject: FW: Incomplete Application Holderied Dock Lake Placid North Elba (T)
Date: Monday, August 19, 2024 2:15:21 PM
Attachments: [redacted]

Hey, FYI, I think this is the one you called about last week.

Matthew Brown
Environmental Program Specialist 1

NYS Adirondack Park Agency
PO Box 99
1133 NYS Route 86
Ray Brook, NY 12977

(518) 891-4050 | Matthew.Brown@apa.ny.gov
www.apa.ny.gov

CONFIDENTIALITY NOTICE: This email, including any attachments, may be confidential, privileged or otherwise legally protected. It is intended only for the addressee(s). If you are not the intended recipient, you are prohibited from disseminating, copying or otherwise using this email or its attachments. If you have received this email in error, please notify the sender immediately by reply email and delete the email from your system.

From: Peter Holderied[redacted]
Sent: Monday, August 19, 2024 2:11 PM
To: Shubert, Benjamin M (DEC) <Benjamin.Shubert@dec.ny.gov>
Cc: Brown, Matthew B (APA) <Matthew.Brown@apa.ny.gov>; Smith, Rebecca A (DEC) <rebecca.smith@dec.ny.gov>
Subject: Re: Incomplete Application Holderied Dock Lake Placid North Elba (T)

ATTENTION: This email came from an external source. Do not open attachments or click on links from unknown senders or unexpected emails.

Ben,

Here are the answers to your questions.

a. The steel caissons are 18" in diameter.

b. The crib stones are from 3" to 6" approximate variable diameter. They will be spread on the lake

bottom once the wood cribs are removed.

c. The existing dock has a width of 28' 6". The proposed dock has a width of 37' 6". This information has already been submitted on the drawings. I will electronically attach the same with this email.

d. The new proposed dock will hug the shore. There will be no gangway. It is not necessary.

Thanks for your help..

On Fri, Aug 16, 2024 at 2:13 PM Shubert, Benjamin M (DEC) <Benjamin.Shubert@dec.ny.gov> wrote:

> Peter Holderied:
>
> Please see the attached Notice of Incomplete Application. If you have any questions regarding the notice, let me know. **The electronic document is in lieu of a paper copy.**
>
> Thank you,
> Ben
>
> **Ben Shubert**
> He/Him
> Environmental Analyst, Division of Environmental Permits
>
> **New York State Department of Environmental Conservation**
> 1115 State Route 86, PO Box 296, Ray Brook, NY 12977
> P: (518) 897-1233 | F: (518) 897-1394 | benjamin.shubert@dec.ny.gov
> www.dec.ny.gov |

NEW YORK STATE OF OPPORTUNITY. | Adirondack Park Agency

September 17, 2024

Peter Holderied
[redacted]

Re: Pre-application A2024-0090
Town of North Elba, Essex County
Land Use Area: Rural Use
Tax Map No.: 33.15-1-5.100

Dear Peter Holderied:

Thank you for meeting with Agency staff at the above-referenced project site on September 11, 2024.

As discussed at that site visit, Agency staff confirmed that no jurisdictional wetlands are present on the project site, and therefore the Agency's wetlands jurisdiction will not apply to the proposal.

Agency staff explained that as the existing dock is considered a non-conforming structure, any expansion would require a variance from the Agency. You were provided with a copy of the Variance Process Summary For Applicants, Application For Variance From Shoreline Restrictions, and Appendix C. Agency staff reviewed these documents with you and discussed the variance process, including that professionally prepared plans would likely be required.

Agency staff explained that as part of the variance process, consideration of all non-jurisdictional alternatives would be required. You stated that you would like to keep the existing non-conforming dock, and your goal was to increase the width of the existing boat slips to accommodate wider boats. Staff recommended replacing the dock in kind, provided the dock is not expanded in width, length or footprint, and reducing the size of the wood decking area adjacent to the boat slips in order to increase the width of each slip. As this would be a reduction in the overall size of the dock, it would not require a permit or variance from the Agency. Agency staff also discussed converting the existing dock to a boathouse as further defined in the attached flyer. The existing dock could be expanded to have a 1200-square-foot footprint as long as it is covered with a permanent roof, and therefore would meet the Agency's boathouse definition of being a covered structure.

When applying the Agency's setback requirements, please remember that structure setbacks are measured horizontally from the closest part of the structure to the mean high water mark. For the purposes of applying the Agency's definitions, a structure consists of all attached components, including all porches, decks, staircases, and other structures.

P.O. Box 99 • 1133 NYS Route 86 • Ray Brook, NY 12977 • Tel: 518 891-4050 • www.apa.ny.gov

Please contact me if you have any questions regarding this letter or the Agency's shoreline restrictions.

Sincerely,

/s/ Keri Surita

Keri Surita
Environmental Program Specialist 1 (EPS1)

Enc: Boathouse Flyer

cc: Ben Shubert - NYSDEC
David Wright – Town of North Elba







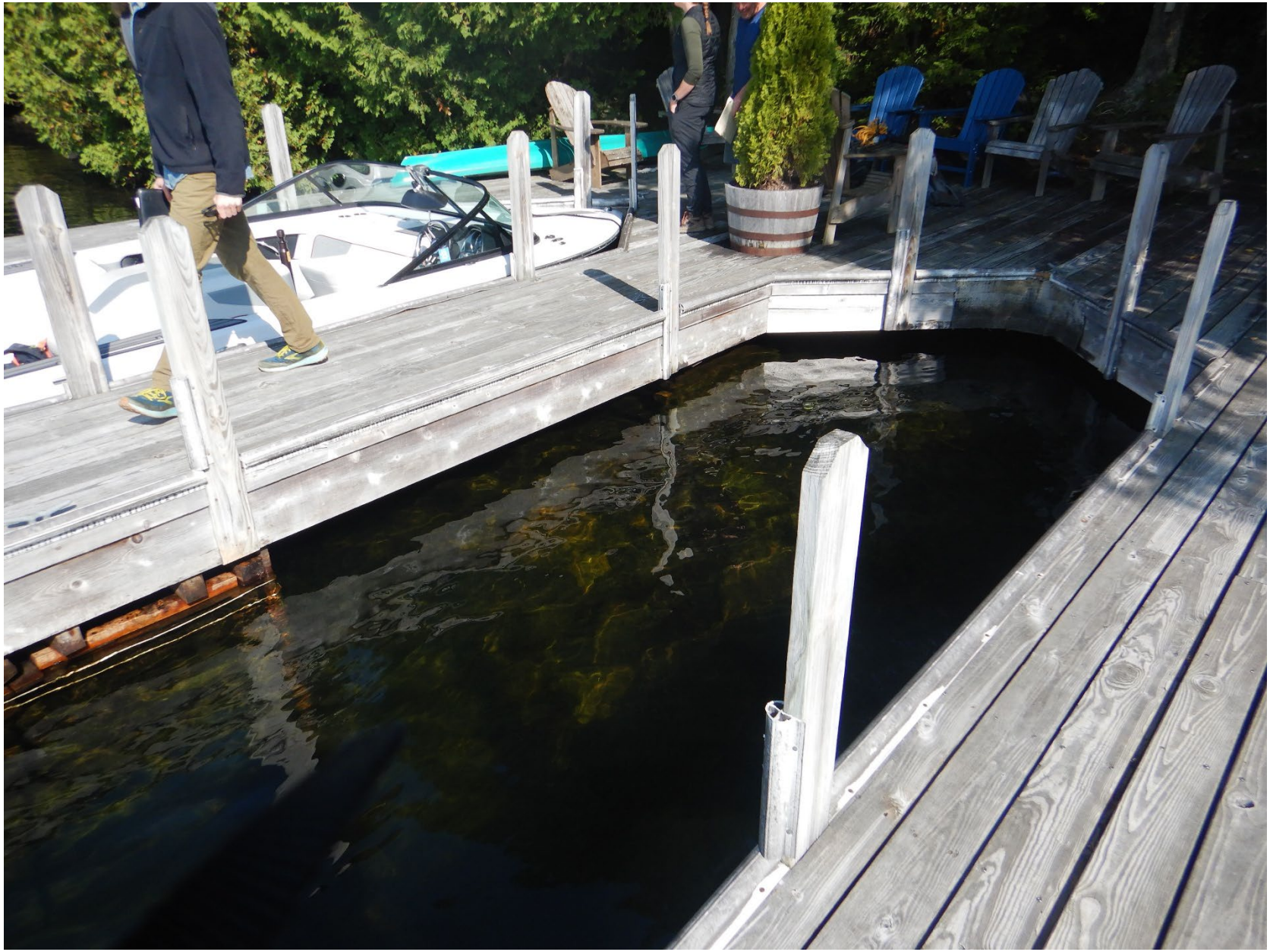



































From: Surita, Keri (APA)
To: [redacted]
Cc: Shubert, Benjamin M (DEC); dwright@northelba.org
Subject: RE: A2024-0090 letter
Date: Thursday, September 19, 2024 2:51:00 PM

Good Afternoon Peter,

We understand that your original proposal was to expand that footprint of the existing non-conforming dock. I see how the language in our letter is confusing. I should have clarified that our understanding following the site visit was that at a minimum you would like to retain the current *footprint* of the existing non-conforming dock, but your goal was to increase the width of both boat slips.

To answer your question - a replacement in kind of the existing non-conforming dock would not require a permit or variance from the Agency. This means that you could increase the width of each boat slip, as long as the overall footprint of the replacement dock does not exceed the footprint of the original non-conforming dock. We would want to review a revised sketch to confirm this prior to issuing any non-jurisdictional letter.

Please let me know if you have any additional questions.

Thank you,
Keri

Keri Surita
Environmental Program Specialist 1

Adirondack Park Agency
P.O. Box 99
1133 State Route 86
Ray Brook, NY 12977

(518) 891-4050 | keri.surita@apa.ny.gov
www.apa.ny.gov

CONFIDENTIALITY NOTICE: This email, including any attachments, may be confidential, privileged or otherwise legally protected. It is intended only for the addressee(s). If you are not the intended recipient, you are prohibited from disseminating, copying or otherwise using this email or its attachments. If you have received this email in error, please notify the sender immediately by reply email and delete the email from your system.

-----Original Message-----
From: Peter Holderied[redacted]
Sent: Wednesday, September 18, 2024 8:11 PM
To: Petith, Stephanie L (APA) <Stephanie.Petith@apa.ny.gov>
Cc: Surita, Keri (APA) <Keri.Surita@apa.ny.gov>; Shubert, Benjamin M (DEC) <Benjamin.Shubert@dec.ny.gov>; dwright@northelba.org
Subject: Re: A2024-0090 letter

ATTENTION: This email came from an external source. Do not open attachments or click on links from unknown senders or unexpected emails.

Correction, Paragraph 3, 2nd sentence.
I do not want to keep the existing dock. I would like to remove cribs, framing and decking and replace with a 1,200 sq. ft. 2 slip casson dock.

Question, Am I reading your comments correctly? If I remove existing crib dock and replace it with a 2 slip casson dock of the same dimensions, Is this allowed?

On Tue, Sep 17, 2024 at 1:30 PM Petith, Stephanie L (APA) <Stephanie.Petith@apa.ny.gov> wrote:
>
> Please see attached……
>
>
>
> Stephanie L. Petith
>
> Administrative Assistant 1
>
>
>
> NYS Adirondack Park Agency
>
> PO Box 99
>
> 1133 NYS Route 86
>
> Ray Brook, NY 12977
>
>
>
> (518) 891-4050 | Stephanie.Petith@apa.ny.gov
>



>
>
> CONFIDENTIALITY NOTICE: This email, including any attachments, may be confidential, privileged or otherwise legally protected. It is intended only for the addressee(s). If you are not the intended recipient, you are prohibited from disseminating, copying or otherwise using this email or its attachments. If you have received this email in error, please notify the sender immediately by reply email and delete the email from your system.
>
>

From: [redacted]
To: [redacted]
Cc: [redacted]
Subject: Re: A2024-0090 letter
Date: Thursday, November 7, 2024 12:59:36 PM
Attachments: [redacted]

ATTENTION This email came from an external source. Do not open attachments or click on links from unknown senders or unexpected emails.

APA and DEC staff.

My family and I have decided to seek a variance on this matter. We are seeking to increase our 2 slip dock from 1,104. sq. ft. to 1,200. sq. ft.
Attached is a drawing of the proposed replacement dock. Please remove the original drawing from the file.

Please let me know of any other information you may need.

Thank You Peter

On Wed, Sep 18, 2024 at 8 10 PM Peter Holderied [redacted] wrote

> Correction, Paragraph 3, 2nd sentence.
> I do not want to keep the existing dock. I would like to remove cribs, > framing and decking and replace with a 1,200 sq. ft. 2 slip casoon > dock.
>
> Question, Am I reading your comments correctly? If I remove existing > crib dock and replace it with a 2 slip casoon dock of the same > dimensions, Is this allowed?
>
> On Tue, Sep 17, 2024 at 1 30 PM Petith, Stephanie L (APA) > <Stephanie.Petith@apa.ny.gov> wrote
> >
> > Please see attached……
> >
> >
> >
> > Stephanie L. Petith
> >
> > Administrative Assistant 1
> >
> >
> >
> > NYS Adirondack Park Agency
> >
> > PO Box 99
> >
> > 1133 NYS Route 86
> >
> > Ray Brook, NY 12977
> >
> >
> >
> > (518) 891-4050 | Stephanie.Petith@apa.ny.gov
[redacted]
> >
> >
> >
> > CONFIDENTIALITY NOTICE This email, including any attachments, may be confidential, privileged or otherwise legally protected. It is intended only for the addressee(s). If you are not the intended recipient, you are prohibited from disseminating, copying or otherwise using this email or its attachments. If you have received this email in error, please notify the sender immediately by reply email and delete the email from your system.
> >
> >

1. Applicant

Name(s): Peter Holdcried

Mailing Address: [redacted]

Telephone (Daytime): [redacted]

Fax/E-mail: _____

2. Current Variance Site[3] Landowner(s):
(if different from Applicant)

Name(s): _____

Mailing Address: _____

Telephone (Daytime): _____

Fax/E-mail: _____

3. Applicant's Legal Interest in Variance Site (check the one that applies):

- X owner
- ___ lessee
- ___ signed purchase agreement holder
- ___ option holder
- ___ other. Specify: _____

If the applicant has an executed contract or agreement to purchase or lease the property, please provide a copy in order to establish the applicant's legal interest in the variance site (purchase price and other confidential information may be redacted).

4. Applicant's Authorized Representative:

By filling in the name and address below and signing this application, the applicant is authorizing the designated representative to act as his/her agent in all matters relating to this variance application before the Adirondack Park Agency. The applicant acknowledges that all contact regarding the application will be through his/her Authorized Representative. Please note that the applicant is ultimately responsible for the accuracy of the information provided in this application.

Name: _____

Mailing Address: _____

_____

Telephone Number (daytime): (___) _____ FAX/E-mail: _____

5. Recorded Deed:

☐ Provide a copy of the current deed, including the recording information, for the variance site. Copies of deeds are available from the County Clerk's Office.

[3] The variance site is usually the deeded parcel on which the activity requiring a variance is proposed to occur.

RECEIVED
ADIRONDACK PARK AGENCY
NOV 18 2024

6. Variance Description:

Submit a narrative description of the proposal, including proposed dimensions. Attach additional sheets if necessary.

Demolition of existing 1,104 sq. ft 2 slip boat dock and replacing it with a 1,200 sq. ft 2 slip boat dock.

7. Variance Site Information:

Road/Highway: _____ Water body/River/Stream: Lake Placid Lake
Size of the variance site: 1.4 acres
Town(s): North Elba County: Essex
Tax Map Designation (from the tax bill for the property):
Section:_____ Block: _____ Parcel: 33.15-1-5.100
Section:_____ Block: _____ Parcel: _____
Local Zoning District:_____
Local Setbacks (feet): Shoreline: 15 Front:_____ Back:_____ Side:_____

(a) On May 22, 1973 did the owner of the variance site also own any adjoining property?

No X
Yes ____ Provide the Tax Map Numbers:
Section:_____Block:_____Parcel:_____
Section:_____Block:_____Parcel:_____

(b) Has any portion of the total contiguous landholding described above been sold, given away or otherwise subdivided since May 22, 1973?

No X
Yes ____ If yes, please list the lots or parcels conveyed from the original parcel and the size of each in square feet or acres.

Parcel Number from current tax map	Date of Conveyance	Lot Size (sq. ft. or acres)	Conveyed by sale or gift?

(c) Are there any structure on the variance site?

No ____
Yes X Provide the information on the following page; attach additional sheets if necessary.

	Date of Construction	Size (sq. ft. of footprint)	Height (feet)	Type/Use (e.g. store, garage)
1.	1987-1990	1,500	22	House
2.				
3.				

(d) Describe any other structures that existed within the shoreline setback area on the variance site on August 1, 1973 that have since been removed or demolished. Include the date that the structure was removed or demolished, and note whether the structure was used for residential, commercial, or accessory purposes. Attach additional sheets if necessary.

None

(e) Describe any exterior alterations or expansions (including changes to structure height) made to any structures located within the shoreline setback area since August 1, 1973. Attach additional sheets if necessary.

NA

8. Prior Agency Action:

(a) Have there been any previous discussions with Agency staff regarding the variance site, or has any Agency staff visited the property?

No ____
Yes X Staff person's name: Keri Sucita and staff biologist and staff wetland ex
Date of Contact: August 2024

(b) Has the variance site been the subject of any past Agency action, such as an Agency permit, variance, jurisdictional determination, enforcement case, or wetland flagging determination?

Unknown ____
No X
Yes ____ If known, provide the following number and date:

Past Permit or Variance Number: _____ date: _____
Jurisdictional Inquiry Number: _____ date: _____
Enforcement Case Number: _____ date: _____
Wetland Boundary Flagging: _____ date: _____
Site Visit _____ date: _____

9. Nearby Landowners:

☒ A current list of the names, mailing addresses, and tax map references for all landowners with property located within 500 feet of the boundaries of the variance site must be submitted by the applicant prior to the public notice and comment period required for the variance request. Attached is a sheet which may be used to provide the required list of adjoining landowners. Note that this information is typically available from the Real Property Tax Services at County Offices or from the Town/Village assessors.

10. Historic Resources:

Does the variance site have any buildings that are more than 50 years old, or does the variance site or surrounding area contain any structures or districts that are listed or deemed eligible to be listed on the State or National Register of Historic Places? Does the variance site involve any known archeological resources?

No X
Yes ____ Describe: _____

11. Other Regulatory Permits and Approvals:

The Agency cannot approve a variance for a proposal which has been denied a variance or permit or which is a prohibited use under local zoning requirements and other local laws or ordinances, unless authorized by a use variance or other means. The proposal should be designed to meet the regulatory requirements of other involved municipalities and agencies.

(a) Local Government Notice Form: Provide a completed copy of the enclosed Local Government Notice Form to the municipality in which your proposal is located. The form should be filled out and signed by an appropriate official (e.g., Zoning Administrator, Planning Board Chairman or Supervisor, if no Zoning Administrator or Planning Board Chairman) and returned with the variance application. Please read the form for further instructions.

(b) Municipal Approval Documents: If local approval has been obtained for the proposal, then provide documentation (e.g., permit, site plan approval or final subdivision plat) to the Agency which confirms that the proposal has been approved pursuant to all applicable town and county laws including any necessary approvals from the planning and zoning boards. Also, please provide a copy of the relevant minutes of all local meetings at which the proposal has been discussed. Please note that this last request is continuous and information should be provided to the Agency as it becomes available.

(c) State and Federal Agency Contacts: Complete the following table and indicate whether any of the following agencies have been contacted. Please provide copies of any applications and other correspondence between the applicant and the agencies listed below. To allow a coordinated review, your APA application will remain incomplete until applications have been submitted to all involved agencies.

Agency	No	Yes	Date	Contact Person and Phone Number
NYS Dept. of Health	X			
NYS Dept. of Transportation	X			
NYS Dept. of Environmental Conservation		X		
NYS Office of Parks, Recreation and Historic Preservation	X			
US Army Corps of Engineers	X			
Lake George Park Commission	X			
Other	X			

(d) State and Federal Permits, Approvals and Determinations: Provide copies of all permits, approvals and determinations received from the above agencies.

12. Required Signatures

I have personally examined and am familiar with the information submitted in this application, including all appendices and attachments, and I believe this information to be true, accurate and complete. I hereby authorized the Adirondack Park Agency and members of its staff to enter on the property described herein for the purposes of conducting such investigations, examinations, tests and site evaluations as it deems necessary, at reasonable times and with advance notice where possible, to verify information contained in or related to this application for a variance.

Landowner(s):

signature	print name	date
[signature]	Peter Holderied	11/10/2024
[signature]	Kim Holderied	11.10.24

Applicant(s) (if not landowners):

signature	print name	date

Authorized Representative:

signature	print name	date
[signature]	Peter Holderied	11/10/2024

Item 9 of Application

Provide names, mailing addresses, and tax map references (tax map, block and parcels numbers) for all landowners with property located within 500 feet of the boundaries of the variance site.

Example: 155-1-27 Mr. John Doe Main Street Jay, New York 12941		
Gary M Lee Christine V Lee	[redacted]	
Paul D. Ulashkevich Gregory Ulashkevich		
Brian Bliss Janet Bliss		
James L. Fosshage Judith W. Fosshage		

NEW YORK STATE OF OPPORTUNITY | Adirondack Park Agency

RECEIVED
ADIRONDACK PARK AGENCY
NOV 18 2024

LOCAL GOVERNMENT NOTICE FORM
for Project/Variance Application to the Adirondack Park Agency

The Adirondack Park Agency will not deem an application complete until the appropriate municipal official in the Town/Village where a project is located has completed, signed and returned this form to the Agency.

If the Town/Village where the project site is located has zoning or other regulations which apply to the proposal, the Adirondack Park Agency will be unable to issue a permit if: (a) the Town/Village has either refused to grant a necessary permit or variance, or (b) the proposal is a prohibited use in that jurisdiction.

To be completed by the Applicant:

APA Project Number (if available): _____

Applicant Name: Peter Holderied Landowner Name: Peter Holderied

Project site location: Town/Village: North Elba Tax Map Number: 33.15-1-5.100

Project type/description: Remove Dock and replace

If the project involves a subdivision, please provide the appropriate local official a copy of the proposed plat as part of the project description with the plan title and date recorded in the space provided above.

To be completed by the Town/Village:

Does the Town/Village have land use controls? ..... ☒ Yes ☐ No

If Yes, please complete 1-9 below. If No, please skip to #9 below.

1) If the Town/Village has zoning, provide Zoning District Name(s): NORTH LAKE RESIDENTIAL

2) How is the "use" defined under the local code? SINGLE FAMILY RESIDENTIAL

Is the "use" allowed in the zoning district(s)? ..... ☒ Yes ☐ No

3) Is the project prohibited by any local law or ordinance? ..... ☐ Yes ☒ No

4) Does this project require a municipal permit? ..... ☒ Yes ☐ No

a) If Yes, is the required permit a building permit only? ..... ☒ Yes ☐ No

b) If No, identify the type of permit required: _____

5) Does this project require a municipal variance? ..... ☐ Yes ☒ No

If Yes, identify the type of variance required (e.g., area, setback, etc.) _____

6) Does the project require any other municipal approval? ..... ☐ Yes ☒ No

If Yes, identify the approval required: _____

7) Has the municipality received an application for this project? ..... ☐ Yes ☒ No

If Yes, has the municipality issued any decision on this project? ..... ☐ Yes ☐ No

8) Provide explanation for any decisions on this project or inconsistencies the project may have with local laws or any comments you wish to provide to the Agency about the project: _____

9) Please provide a daytime contact telephone number with the best days/times to be reached, and/or an email address for the official signing this form, should Agency staff have further questions regarding municipal review of this project: (518) 523-9518 best times _____

e-mail: dwhitney@northelba.org

Darci Whitney

Signature of Zoning Official or Planning Board Chair (or Supervisor/Mayor if no such official exists)

DARCI WHITNEY, CODE ENFORCEMENT OFFICER — 11/13/24

Name and Title (Print) — **Date**

Please return this completed & signed form to the address or fax number below.

P.O. Box 99 • 1133 NYS Route 86 • Ray Brook, NY 12977 • Tel: 518 891-4050 • Fax: 518 891-3938 • www.apa.ny.gov

1,200 sq. ft.

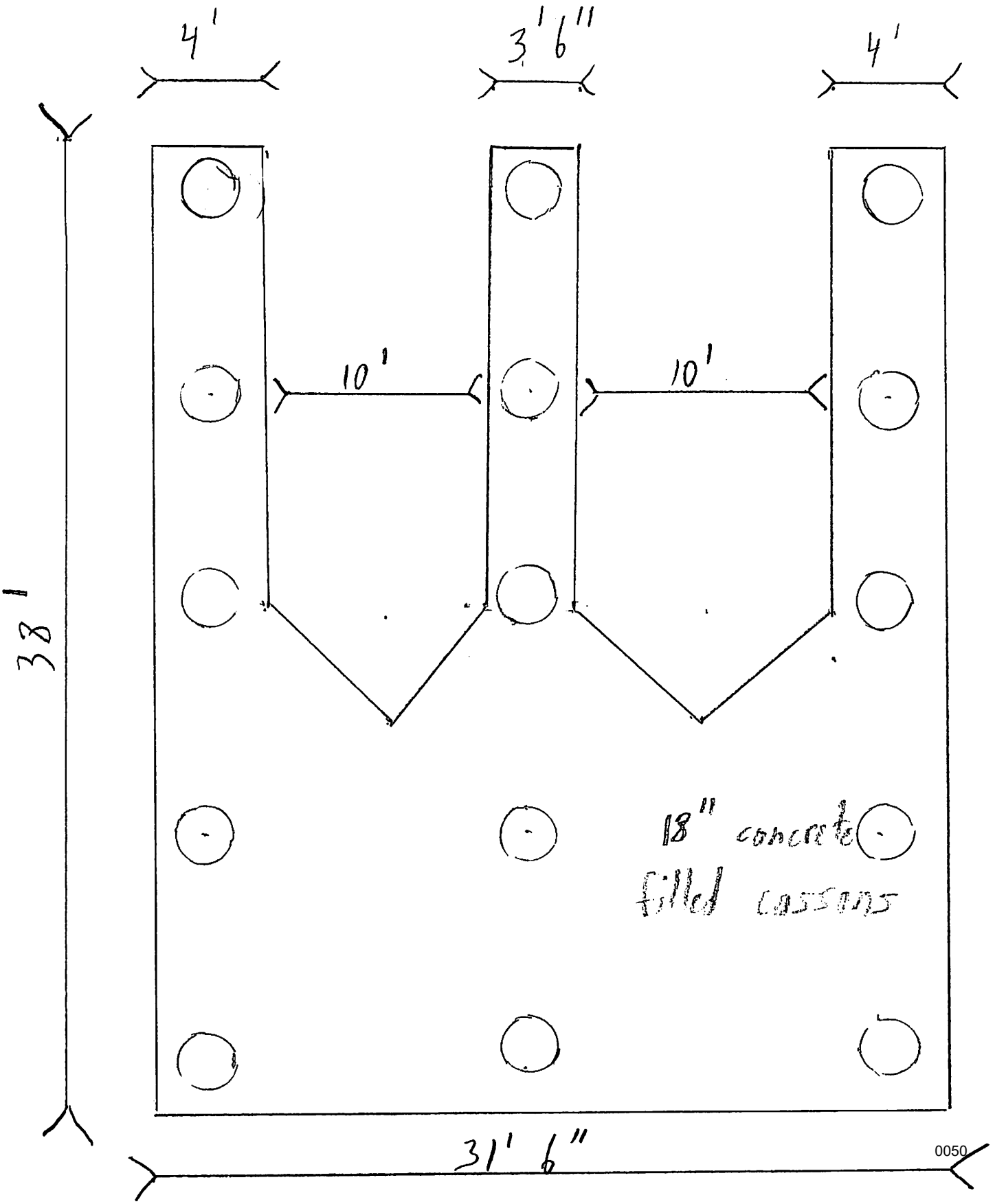

From: Surita, Keri (APA)
To: [redacted]
Subject: FW: A2024-0090 letter
Date: Tuesday, November 19, 2024 9:52:00 AM
Attachments: AppendixC-NewStructureInSetback.pdf

Good Morning Peter - to follow up, as your wife Kim is also listed on the deed for the property she will need to sign the application as well.

Thank you,
Keri

Keri Surita
Environmental Program Specialist 1

Adirondack Park Agency
P.O. Box 99
1133 State Route 86
Ray Brook, NY 12977

(518) 891-4050 | keri.surita@apa.ny.gov
www.apa.ny.gov

CONFIDENTIALITY NOTICE: This email, including any attachments, may be confidential, privileged or otherwise legally protected. It is intended only for the addressee(s). If you are not the intended recipient, you are prohibited from disseminating, copying or otherwise using this email or its attachments. If you have received this email in error, please notify the sender immediately by reply email and delete the email from your system.

-----Original Message-----
From: Surita, Keri (APA)
Sent: Monday, November 18, 2024 2:01 PM
To: Peter Holderied [redacted]
Subject: FW: A2024-0090 letter

Good Afternoon Peter,

We received your variance application today. However, it looks like you only submitted the "Variance Application" without "Appendix C". As discussed, we need both applications. You will need to submit "Appendix C" and all required attachments before we can officially start our review.

Please let me know if you have any questions.

Thank you,
Keri

Keri Surita
Environmental Program Specialist 1

Adirondack Park Agency
P.O. Box 99
1133 State Route 86

Ray Brook, NY 12977

(518) 891-4050 | keri.surita@apa.ny.gov www.apa.ny.gov

CONFIDENTIALITY NOTICE: This email, including any attachments, may be confidential, privileged or otherwise legally protected. It is intended only for the addressee(s). If you are not the intended recipient, you are prohibited from disseminating, copying or otherwise using this email or its attachments. If you have received this email in error, please notify the sender immediately by reply email and delete the email from your system.

-----Original Message-----
From: Surita, Keri (APA)
Sent: Thursday, November 7, 2024 1:09 PM
To: Peter Holderied [redacted]; Petith, Stephanie L (APA) <Stephanie.Petith@apa.ny.gov>
Cc: Shubert, Benjamin M (DEC) <benjamin.shubert@dec.ny.gov>; dwright@northelba.org
Subject: RE: A2024-0090 letter

Good Afternoon Peter,

As we discussed during the site visit, if you wish to proceed with the variance process you will need to fill out the Agency's variance applications before we start our official review. I have attached them again to this email for you. Once you submit, your proposal will be assigned an official project number and we will begin our formal review process.

Please complete both applications and include any required attachments when you submit them. You can email everything back to me directly, and cc APASubmissions@apa.ny.gov

Thank you,
Keri

Keri Surita
Environmental Program Specialist 1

Adirondack Park Agency
P.O. Box 99
1133 State Route 86
Ray Brook, NY 12977

(518) 891-4050 | keri.surita@apa.ny.gov www.apa.ny.gov

CONFIDENTIALITY NOTICE: This email, including any attachments, may be confidential, privileged or otherwise legally protected. It is intended only for the addressee(s). If you are not the intended recipient, you are prohibited from disseminating, copying or otherwise using this email or its attachments. If you have received this email in error, please notify the sender immediately by reply email and delete the email from your system.

-----Original Message-----
From: Peter Holderie [redacted]
Sent: Thursday, November 7, 2024 12:58 PM
To: Petith, Stephanie L (APA) <Stephanie.Petith@apa.ny.gov>

Cc: Surita, Keri (APA) <Keri.Surita@apa.ny.gov>; Shubert, Benjamin M (DEC) <Benjamin.Shubert@dec.ny.gov>; dwright@northelba.org
Subject: Re: A2024-0090 letter

ATTENTION: This email came from an external source. Do not open attachments or click on links from unknown senders or unexpected emails.

APA and DEC staff.

My family and I have decided to seek a variance on this matter. We are seeking to increase our 2 slip dock from 1,104. sq. ft. to 1,200. sq.
ft.
Attached is a drawing of the proposed replacement dock. Please remove the original drawing from the file.

Please let me know of any other information you may need.

Thank You Peter

On Wed, Sep 18, 2024 at 8:10 PM Peter Holderied [redacted] wrote:
>
> Correction, Paragraph 3, 2nd sentence.
> I do not want to keep the existing dock. I would like to remove cribs,
> framing and decking and replace with a 1,200 sq. ft. 2 slip casson
> dock.
>
> Question, Am I reading your comments correctly? If I remove existing
> crib dock and replace it with a 2 slip casson dock of the same
> dimensions, Is this allowed?
>
> On Tue, Sep 17, 2024 at 1:30 PM Petith, Stephanie L (APA)
> <Stephanie.Petith@apa.ny.gov> wrote:
> >
> > Please see attached……
> >
> >
> >
> > Stephanie L. Petith
> >
> > Administrative Assistant 1
> >
> >
> >
> > NYS Adirondack Park Agency
> >
> > PO Box 99
> >
> > 1133 NYS Route 86
> >
> > Ray Brook, NY 12977
> >
> >
> >
> > (518) 891-4050 | Stephanie.Petith@apa.ny.gov
[redacted]

[redacted]

> >
> >
> >
> > CONFIDENTIALITY NOTICE: This email, including any attachments, may be confidential, privileged or otherwise legally protected. It is intended only for the addressee(s). If you are not the intended recipient, you are prohibited from disseminating, copying or otherwise using this email or its attachments. If you have received this email in error, please notify the sender immediately by reply email and delete the email from your system.
> >
> >

From: Surita, Keri (APA)
To: [redacted]
Cc:
Subject: APA Project P2024-0328 - Holderied
Date: Tuesday, December 3, 2024 11:16:00 AM
Attachments: [redacted]

Hi Bob,

Following our phone call I reviewed the materials associated with the pre-application file (A2024-0090) and the existing project file (P2024-0328). Based on the information we have the current proposal does appear to require a variance. I have attached the current site plan to this email.

During our site visit on September 11, 2024, engineering staff measured the existing dock as having a width of 28.5 feet. The Agency's dock definition limits the maximum width of a dock to 8 feet. Therefore, the existing dock does not comply with this definition and is considered a non-conforming structure. The Holderied's are proposing to expand the dock to a total width of 31.6 feet (as shown on the attached site plan). As this would be an expansion of a non-conforming structure it would require a variance.

Regarding the Appendix Application – I did send Peter the incorrect appendix, so I see why you had questions. I have attached the appropriate one here – Appendix B.

Please let me know if you have any additional questions.

Thank you,

Keri Surita
Environmental Program Specialist 1

Adirondack Park Agency
P.O. Box 99
1133 State Route 86
Ray Brook, NY 12977

(518) 891-4050 | keri.surita@apa.ny.gov
www.apa.ny.gov

CONFIDENTIALITY NOTICE: This email, including any attachments, may be confidential, privileged or otherwise legally protected. It is intended only for the addressee(s). If you are not the intended recipient, you are prohibited from disseminating, copying or otherwise using this email or its attachments. If you have received this email in error, please notify the sender immediately by reply email and delete the email from your system.

December 10, 2024

Robert M. Marvin, Jr.
PO Box 969
Lake Placid, NY 12946

Peter Holderied
[redacted]

Re: Variance Application 2024-0328
Town of North Elba, Essex County
Land Use Area: Rural Use
Tax Map No.: 33.15-1-5.100

Dear Robert Marvin:

Thank you for your email regarding the above-referenced project site, received by Agency staff on December 4, 2024.

The existing dock constitutes a single lawfully non-conforming shoreline structure for Agency purposes. Specifically, the existing dock measures 28 feet and 5 inches where it attaches to the shoreline. This measurement is greater than the 8-foot width as allowed by Agency regulations at 9 NYCRR Part 570.30(j) for any portion of a single dock. Accordingly, any expansion beyond the existing non-conforming dimensions requires a variance from the Agency.

In order to process the proposed variance request, please submit Appendix B and all relevant required attachments, including professionally prepared plans detailing the dimensions of the existing and proposed structures, along with the variance justification.

Please contact me if you have any questions regarding this letter.

Sincerely,

John M. Burth
Environmental Program Specialist 3 (EPS3)

P.O. Box 99 | 1133 State Route 86 | Ray Brook, NY 12977 | Tel: (518) 891-4050 | www.apa.ny.gov

NEW YORK STATE OF OPPORTUNITY | Adirondack Park Agency

LOCAL GOVERNMENT NOTICE FORM
for Project/Variance Application to the Adirondack Park Agency

The Adirondack Park Agency will not deem an application complete until the appropriate municipal official in the Town/Village where a project is located has completed, signed and returned this form to the Agency.

If the Town/Village where the project site is located has zoning or other regulations which apply to the proposal, the Adirondack Park Agency will be unable to issue a permit if: (a) the Town/Village has either refused to grant a necessary permit or variance, or (b) the proposal is a prohibited use in that jurisdiction.

To be completed by the Applicant: APA Project Number (if available): _____

Applicant Name: Peter Holdenried Landowner Name: Peter Holdenried

Project site location: Town/Village: North Elba Tax Map Number: 33.15-1-5.100

Project type/description: Remove Dock and replace

If the project involves a subdivision, please provide the appropriate local official a copy of the proposed plat as part of the project description with the plan title and date recorded in the space provided above.

To be completed by the Town/Village:

Does the Town/Village have land use controls? ..... ☒ Yes ☐ No

If Yes, please complete 1-9 below. If No, please skip to #9 below.

1) If the Town/Village has zoning, provide Zoning District Name(s): NORTH LAKE RESIDENTIAL

2) How is the "use" defined under the local code? SINGLE FAMILY RESIDENTIAL

Is the "use" allowed in the zoning district(s)? ..... ☒ Yes ☐ No

3) Is the project prohibited by any local law or ordinance? ..... ☐ Yes ☒ No

4) Does this project require a municipal permit? ..... ☒ Yes ☐ No

a) If Yes, is the required permit a building permit only? ..... ☒ Yes ☐ No

b) If No, identify the type of permit required: _____

5) Does this project require a municipal variance? ..... ☐ Yes ☒ No

If Yes, identify the type of variance required (e.g., area, setback, etc.) _____

6) Does the project require any other municipal approval? ..... ☐ Yes ☒ No

If Yes, identify the approval required: _____

7) Has the municipality received an application for this project? ..... ☐ Yes ☒ No

If Yes, has the municipality issued any decision on this project? ..... ☐ Yes ☐ No

8) Provide explanation for any decisions on this project or inconsistencies the project may have with local laws or any comments you wish to provide to the Agency about the project: _____

9) Please provide a daytime contact telephone number with the best days/times to be reached, and/or an email address for the official signing this form, should Agency staff have further questions regarding municipal review of this project: (518) 523-9518 best times _____

e-mail: dwhitney@northelba.org

Darci Whitney

Signature of Zoning Official or Planning Board Chair (or Supervisor/Mayor if no such official exists)

DARCI WHITNEY, CODE ENFORCEMENT OFFICER — 11/13/24

Name and Title (Print) — ***Date***

Please return this completed & signed form to the address or fax number below.

NEW YORK STATE OF OPPORTUNITY. Adirondack Park Agency

RECEIVED
ADIRONDACK PARK AGENCY
SEP - 9 2026

LOCAL GOVERNMENT NOTICE FORM
for Project/Variance Application to the Adirondack Park Agency

The Adirondack Park Agency will not deem an application complete until the appropriate municipal official in the Town/Village where a project is located has completed, signed and returned this form to the Agency.

If the Town/Village where the project site is located has zoning or other regulations which apply to the proposal, the Adirondack Park Agency will be unable to issue a permit if: (a) the Town/Village has either refused to grant a necessary permit or variance, or (b) the proposal is a prohibited use in that jurisdiction.

To be completed by the Applicant: APA Project Number (if available): _____

Applicant Name: Peter Holderied Landowner Name: Peter Holderied

Project site location: Town/Village: North Elba Tax Map Number: 33.15-1-5.100

Project type/description: Remove Deck and replace

If the project involves a subdivision, please provide the appropriate local official a copy of the proposed plat as part of the project description with the plan title and date recorded in the space provided above.

To be completed by the Town/Village:

Does the Town/Village have land use controls? ..... ☒ Yes ☐ No

If Yes, please complete 1-9 below. If No, please skip to #9 below.

1) If the Town/Village has zoning, provide Zoning District Name(s): NORTH LAKE RESIDENTIAL

2) How is the "use" defined under the local code? SINGLE FAMILY RESIDENTIAL

Is the "use" allowed in the zoning district(s)? ..... ☒ Yes ☐ No

3) Is the project prohibited by any local law or ordinance? ..... ☐ Yes ☒ No

4) Does this project require a municipal permit? ..... ☒ Yes ☐ No

a) If Yes, is the required permit a building permit only? ..... ☒ Yes ☐ No

b) If No, identify the type of permit required: _____

5) Does this project require a municipal variance? ..... ☐ Yes ☒ No

If Yes, identify the type of variance required (e.g., area, setback, etc.) _____

6) Does the project require any other municipal approval? ..... ☐ Yes ☒ No

If Yes, identify the approval required: _____

7) Has the municipality received an application for this project? ..... ☐ Yes ☒ No

If Yes, has the municipality issued any decision on this project? ..... ☐ Yes ☐ No

8) Provide explanation for any decisions on this project or inconsistencies the project may have with local laws or any comments you wish to provide to the Agency about the project: _____

9) Please provide a daytime contact telephone number with the best days/times to be reached, and/or an email address for the official signing this form, should Agency staff have further questions regarding municipal review of this project: (518) 523-9518 best times _____

e-mail: dwhitney@northelba.org

Darci Whitney

Signature of Zoning Official or Planning Board Chair (or Supervisor/Mayor if no such official exists)

DARCI WHITNEY, CODE ENFORCEMENT OFFICER — 11/13/24

Name and Title (Print) — ***Date***

Please return this completed & signed form to the address or fax number below.

P.O. Box 99 • 1133 NYS Route 86 • Ray Brook, NY 12977 • Tel: 518 891-4050 • Fax: 518 891-3938 • www.apa.ny.gov

Please send all application materials to apasubmissions@apa.ny.gov

RECEIVED
ADIRONDACK PARK AGENCY
SEP - 9 2026

ADIRONDACK PARK AGENCY
Division of Regulatory Programs
PO Box 99, 1133 NYS Route 86
Ray Brook, New York 12977
Telephone (518) 891-4050
www.apa.ny.gov

NEW YORK STATE OF OPPORTUNITY. Adirondack Park Agency

APPLICATION FOR VARIANCE FROM SHORELINE RESTRICTIONS

APPLICATION

Background: The Adirondack Park Agency Act and Agency regulations implementing the NYS Wild, Scenic and Recreational Rivers System Act establish shoreline restrictions on lands associated with lakes, ponds, rivers, and streams. A variance must be obtained from the Agency before undertaking any development activity that does not comply with these restrictions.[1]

Instructions: Please complete questions 1 through 12 below. As part of the application, please also complete the appendix (or appendices) specific to the type of variance being requested. **Three** copies of the completed application and applicable appendices must be submitted to the Agency at the address listed above. **All maps, plans, photographs, and other graphics must also be provided in electronic format (Adobe Acrobat or PDF), unless otherwise agreed to by Agency staff.** Note that a permit application is also required for any proposal that involves both a shoreline restriction variance and an Agency permit. To determine which appendices must be included as part of the application, please check which of the following activities apply to the proposal (it may be useful to reference the Agency's Shoreline Restrictions flyer:[2]

- ☐ **Appendix A** - Expansion of an existing single family dwelling within the shoreline setback
- ☐ **Appendix B** - Expansion of an existing structure other than a single family dwelling within the shoreline setback
- ☐ **Appendix C** - Construction of a new structure within the shoreline setback (other than a retaining wall or other structure for shoreline stabilization)
- ☐ **Appendix D** - Construction of a retaining wall or other structure for shoreline stabilization
- ☐ **Appendix E** - Construction of a dwelling without the minimum required shoreline lot width
- ☐ **Appendix F** - Construction of a wastewater absorption field within 100 feet of a water body
- ☐ **Appendix G** - Removal of shoreline vegetation in excess of Agency standards

[1] Please note that a variance may not be required if the site is located in a Town that administers an Agency-approved local land use program (ALLUP). The communities with an ALLUP are: Arietta, Bolton, Caroga, Chester, Chesterfield, Colton, Day, Edinburg, Hague, Horicon, Indian Lake, Johnsburg, Lake George, Newcomb, Queensbury, Village of Lake George, Westport and Willsboro.

[2] Available at: https://www.apa.ny.gov/Documents/Flyers/ShorelineRestrictions.pdf

1. Applicant

Name(s): _____

_____

Mailing Address: _____

_____

_____

Telephone (Daytime): _____

Fax/E-mail: _____

2. Current Variance Site[3] Landowner(s):
(if different from Applicant)

Name(s): _____

_____

Mailing Address: _____

_____

_____

Telephone (Daytime): _____

Fax/E-mail: _____

3. Applicant's Legal Interest in Variance Site (check the one that applies):

___ owner
___ lessee
___ signed purchase agreement holder
___ option holder
___ other. Specify: _____

If the applicant has an executed contract or agreement to purchase or lease the property, please provide a copy in order to establish the applicant's legal interest in the variance site (purchase price and other confidential information may be redacted).

4. Applicant's Authorized Representative:

By filling in the name and address below and signing this application, the applicant is authorizing the designated representative to act as his/her agent in all matters relating to this variance application before the Adirondack Park Agency. The applicant acknowledges that all contact regarding the application will be through his/her Authorized Representative. Please note that the applicant is ultimately responsible for the accuracy of the information provided in this application.

Name: _____
Mailing Address: _____
_____
Telephone Number (daytime): (___) _____ FAX/E-mail: _____

5. Recorded Deed:

☐ Provide a copy of the current deed, including the recording information, for the variance site. Copies of deeds are available from the County Clerk's Office.

[3] The variance site is usually the deeded parcel on which the activity requiring a variance is proposed to occur.

RECEIVED
ADIRONDACK PARK AGENCY

SEP - 9 2026

1. Applicant

Name(s): Peter Holderied

Ma[redacted]

Te[redacted]

Fax/E-mail: _____

2. Current Variance Site[3] Landowner(s):
(if different from Applicant)

Name(s): _____

Mailing Address: _____

Telephone (Daytime): _____

Fax/E-mail: _____

3. Applicant's Legal Interest in Variance Site (check the one that applies):

X owner
___ lessee
___ signed purchase agreement holder
___ option holder
___ other. Specify: _____

If the applicant has an executed contract or agreement to purchase or lease the property, please provide a copy in order to establish the applicant's legal interest in the variance site (purchase price and other confidential information may be redacted).

4. Applicant's Authorized Representative:

By filling in the name and address below and signing this application, the applicant is authorizing the designated representative to act as his/her agent in all matters relating to this variance application before the Adirondack Park Agency. The applicant acknowledges that all contact regarding the application will be through his/her Authorized Representative. Please note that the applicant is ultimately responsible for the accuracy of the information provided in this application.

Name: _____
Mailing Address: _____
_____
Telephone Number (daytime): (___) _____ FAX/E-mail: _____

5. Recorded Deed:

☐ Provide a copy of the current deed, including the recording information, for the variance site. Copies of deeds are available from the County Clerk's Office.

[3] The variance site is usually the deeded parcel on which the activity requiring a variance is proposed to occur.

6. Variance Description:

Submit a narrative description of the proposal, including proposed dimensions. Attach additional sheets if necessary.

Demolition of existing 1,104 sq. ft 2 s/l/p boat dock and replacing it with a 1,200 sq. ft 2 s/l/p boat dock.

7. Variance Site Information:

Road/Highway: _____ Water body/River/Stream: Lake Placid Lake.
Size of the variance site: 1.4 acres
Town(s): North Elba County: Essex
Tax Map Designation (from the tax bill for the property):
Section:_____ Block: _____ Parcel: 33.15-1-5.100
Section:_____ Block: _____ Parcel: _____
Local Zoning District:_____
Local Setbacks (feet): Shoreline: 15 Front:_____ Back:_____ Side:_____

(a) On May 22, 1973 did the owner of the variance site also own any adjoining property?

No X
Yes ____ Provide the Tax Map Numbers:
Section:_____Block:_____Parcel:_____
Section:_____Block:_____Parcel:_____

(b) Has any portion of the total contiguous landholding described above been sold, given away or otherwise subdivided since May 22, 1973?

No X
Yes ____ If yes, please list the lots or parcels conveyed from the original parcel and the size of each in square feet or acres.

Parcel Number from current tax map	Date of Conveyance	Lot Size (sq. ft. or acres)	Conveyed by sale or gift?

(c) Are there any structure on the variance site?

No ____
Yes X Provide the information on the following page; attach additional sheets if necessary.

RECEIVED
ADIRONDACK PARK AGENCY

SEP - 9 2026

	Date of Construction	Size (sq. ft. of footprint)	Height (feet)	Type/Use (e.g. store, garage)
1.	1987-1990	1,500	22	House
2.				
3.				

(d) Describe any other structures that existed within the shoreline setback area on the variance site on August 1, 1973 that have since been removed or demolished. Include the date that the structure was removed or demolished, and note whether the structure was used for residential, commercial, or accessory purposes. Attach additional sheets if necessary.

None

(e) Describe any exterior alterations or expansions (including changes to structure height) made to any structures located within the shoreline setback area since August 1, 1973. Attach additional sheets if necessary.

NA

8. Prior Agency Action:

(a) Have there been any previous discussions with Agency staff regarding the variance site, or has any Agency staff visited the property?

No ____
Yes X Staff person's name: Keri Sucita and staff biologist
Date of Contact: August 2024 and staff wetland expert

(b) Has the variance site been the subject of any past Agency action, such as an Agency permit, variance, jurisdictional determination, enforcement case, or wetland flagging determination?

Unknown ____
No X
Yes ____ If known, provide the following number and date:

Past Permit or Variance Number: _____ date: _____
Jurisdictional Inquiry Number: _____ date: _____
Enforcement Case Number: _____ date: _____
Wetland Boundary Flagging: _____ date: _____
Site Visit _____ date: _____

9. Nearby Landowners:

☒ A current list of the names, mailing addresses, and tax map references for all landowners with property located within 500 feet of the boundaries of the variance site must be submitted by the applicant prior to the public notice and comment period required for the variance request. Attached is a sheet which may be used to provide the required list of adjoining landowners. Note that this information is typically available from the Real Property Tax Services at County Offices or from the Town/Village assessors.

10. Historic Resources:

Does the variance site have any buildings that are more than 50 years old, or does the variance site or surrounding area contain any structures or districts that are listed or deemed eligible to be listed on the State or National Register of Historic Places? Does the variance site involve any known archeological resources?

No X
Yes ____ Describe: _____

11. Other Regulatory Permits and Approvals:

The Agency cannot approve a variance for a proposal which has been denied a variance or permit or which is a prohibited use under local zoning requirements and other local laws or ordinances, unless authorized by a use variance or other means. The proposal should be designed to meet the regulatory requirements of other involved municipalities and agencies.

(a) Local Government Notice Form: Provide a completed copy of the enclosed Local Government Notice Form to the municipality in which your proposal is located. The form should be filled out and signed by an appropriate official (e.g., Zoning Administrator, Planning Board Chairman or Supervisor, if no Zoning Administrator or Planning Board Chairman) and returned with the variance application. Please read the form for further instructions.

(b) Municipal Approval Documents: If local approval has been obtained for the proposal, then provide documentation (e.g., permit, site plan approval or final subdivision plat) to the Agency which confirms that the proposal has been approved pursuant to all applicable town and county laws including any necessary approvals from the planning and zoning boards. Also, please provide a copy of the relevant minutes of all local meetings at which the proposal has been discussed. Please note that this last request is continuous and information should be provided to the Agency as it becomes available.

(c) State and Federal Agency Contacts: Complete the following table and indicate whether any of the following agencies have been contacted. Please provide copies of any applications and other correspondence between the applicant and the agencies listed below. To allow a coordinated review, your APA application will remain incomplete until applications have been submitted to all involved agencies.

9. Nearby Landowners:

☐ A current list of the names, mailing addresses, and tax map references for all landowners with property located within 500 feet of the boundaries of the variance site must be submitted by the applicant prior to the public notice and comment period required for the variance request. Attached is a sheet which may be used to provide the required list of adjoining landowners. Note that this information is typically available from the Real Property Tax Services at County Offices or from the Town/Village assessors.

10. Historic Resources:

Does the variance site have any buildings that are more than 50 years old, or does the variance site or surrounding area contain any structures or districts that are listed or deemed eligible to be listed on the State or National Register of Historic Places? Does the variance site involve any known archeological resources?

No X
Yes ____ Describe: _____

11. Other Regulatory Permits and Approvals:

The Agency cannot approve a variance for a proposal which has been denied a variance or permit or which is a prohibited use under local zoning requirements and other local laws or ordinances, unless authorized by a use variance or other means. The proposal should be designed to meet the regulatory requirements of other involved municipalities and agencies.

(a) Local Government Notice Form: Provide a completed copy of the enclosed Local Government Notice Form to the municipality in which your proposal is located. The form should be filled out and signed by an appropriate official (e.g., Zoning Administrator, Planning Board Chairman or Supervisor, if no Zoning Administrator or Planning Board Chairman) and returned with the variance application. Please read the form for further instructions.

(b) Municipal Approval Documents: If local approval has been obtained for the proposal, then provide documentation (e.g., permit, site plan approval or final subdivision plat) to the Agency which confirms that the proposal has been approved pursuant to all applicable town and county laws including any necessary approvals from the planning and zoning boards. Also, please provide a copy of the relevant minutes of all local meetings at which the proposal has been discussed. Please note that this last request is continuous and information should be provided to the Agency as it becomes available.

(c) State and Federal Agency Contacts: Complete the following table and indicate whether any of the following agencies have been contacted. Please provide copies of any applications and other correspondence between the applicant and the agencies listed below. To allow a coordinated review, your APA application will remain incomplete until applications have been submitted to all involved agencies.

Agency	No	Yes	Date	Contact Person and Phone Number
NYS Dept. of Health	X			
NYS Dept. of Transportation	X			
NYS Dept. of Environmental Conservation		X		
NYS Office of Parks, Recreation and Historic Preservation	X			
US Army Corps of Engineers	X			
Lake George Park Commission	X			
Other				

(d) State and Federal Permits, Approvals and Determinations: Provide copies of all permits, approvals and determinations received from the above agencies.

12. Required Signatures

I have personally examined and am familiar with the information submitted in this application, including all appendices and attachments, and I believe this information to be true, accurate and complete. I hereby authorized the Adirondack Park Agency and members of its staff to enter on the property described herein for the purposes of conducting such investigations, examinations, tests and site evaluations as it deems necessary, at reasonable times and with advance notice where possible, to verify information contained in or related to this application for a variance.

Landowner(s):

signature	print name	date
	Peter Holderied	9/4/26
	Kim Holderied	9/4/26

Applicant(s) (if not landowners):

signature	print name	date

Authorized Representative:

signature	print name	date
	Peter Holderied	9/4/26

RECEIVED
ADIRONDACK PARK AGENCY
SEP - 9 2026

Item 9 of Application

Provide names, mailing addresses, and tax map references (tax map, block and parcels numbers) for all landowners with property located within 500 feet of the boundaries of the variance site.

Example: 155-1-27 Mr. John Doe Main Street Jay, New York 12941		
Gary M Lee Christine V Lee	[redacted]	
Paul D. Ulashkevich Gregory Ulashkevich		
Brian Bliss Janet Bliss		
James L. Fosshage Judith W. Fosshage		

pre application # A 2024-0090
tax map # 33.15-1-5.100

PROJECT NARRATIVE

Peter & Kim Holderied
[redacted]

RECEIVED
ADIRONDACK PARK AGENCY
SEP - 9 2026

Proposed Replacement of Existing Two-Slip Dock

The purpose of the project at 12 George & Bliss Ln, North Elba, NY, is to remove the existing approximately **1,100-square-foot wood crib, two-slip boat dock** and replace it with an approximately **1,200-square-foot steel caisson, two-slip dock**.

On **September 11, 2024, Keri Surita, along with an Adirondack Park Agency (APA) engineer and biologist, visited the property to review the existing dock and discuss the proposed replacement.** During this site visit, I explained that the existing wood crib dock is in poor condition and has deteriorated to the point that replacement is necessary.

Rather than reconstructing the dock using the same wood crib design, I am proposing a steel-frame/steel-caisson structure that will be more durable and less susceptible to damage and movement caused by winter ice conditions. The intent is to construct a safer, longer-lasting structure while continuing the existing use as a two-slip dock.

The proposed dock is only modestly larger than the existing structure, increasing from approximately **1,100 square feet to 1,200 square feet**. The additional area is primarily necessary to provide larger slips capable of accommodating the wider beam of many modern recreational boats. The proposal does not increase the number of boat slips; the property currently has two slips, and the replacement dock will continue to have two slips.

I understand that the proposed configuration does not comply with the APA's **8-foot dimensional requirement** and therefore requires approval from the Agency. However, I respectfully request that the Agency consider the relatively limited nature of the proposed expansion, the continued two-slip use, and the environmental impact of the proposed structure when evaluating this request.

I also understand that a boathouse could potentially be constructed in association with the dock without requiring the same variance being requested for this proposal. I am not seeking to construct a boathouse. Instead, I am proposing a comparatively simple, dock structure. It would seem that an open steel-frame dock, without the walls, roof, mass, and visual impact associated with a boathouse, would represent a less intensive and less environmentally and visually impactful improvement to the shoreline.

An additional concern is the deteriorating condition of the existing dock. I would like to replace the structure before its condition worsens and creates a potential safety hazard,

RECEIVED
ADIRONDACK PARK AGENCY
SEP - 9 2026

particularly for my children and others using the waterfront. Replacing the dock now with a properly engineered steel structure will provide a safer and more durable waterfront improvement while avoiding the need for repeated repairs to the existing aging crib structure.

The overall goals of the project are therefore to:

- Remove an existing dock that is in deteriorating condition;
- Maintain the property's existing **two-slip** use rather than increase the number of slips;
- Replace the existing wood crib construction with a more durable steel-frame/steel-caisson design that is less susceptible to ice movement;
- Provide slightly wider slips that better accommodate the dimensions of modern boats;
- Improve the safety and long-term structural integrity of the dock; and
- Accomplish these objectives with an open dock structure rather than constructing a larger and more visually intensive boathouse.

Included with this application packet are a **drawing of the existing dock, the required survey map, and the engineering plans for the proposed new steel-frame dock.**

I respectfully request that the Adirondack Park Agency consider the circumstances of the existing structure, the limited increase in overall dock area, the fact that the number of slips will remain unchanged, and the practical and environmental advantages of the proposed design when reviewing this application.

Please feel free to contact me if additional information, documentation, or clarification is required.

Peter Holderied
Phone [redacted]
Email: [redacted]

RECEIVED
ADIRONDACK PARK AGENCY
SEP - 9 2026

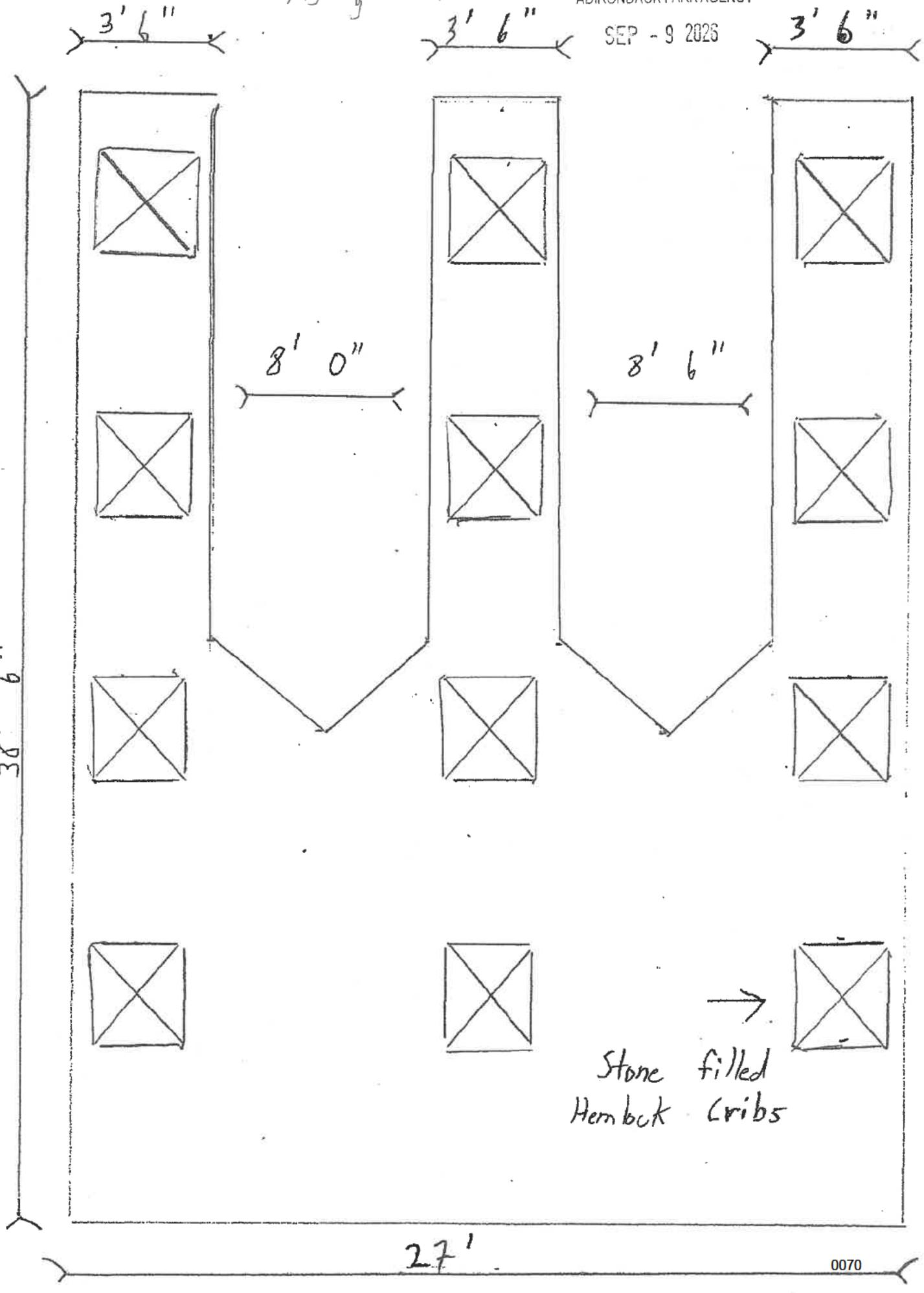

Map of Survey

prepared for

Peter Holderied and Kim Holderied

~ situate ~
Town of North Elba, County of Essex, State of New York

~ being part of ~
Lot No. 294, Township 11, Old Military Tract, Richard's Survey
Lot 6 & 7 The Bank of Lake Placid as Surveyed by E.W. Sears, June 05, 1954

~ being the same Premises as conveyed by ~
Kiperaan Corp. to Peter Holderied and Kim Holderied by deed dated October 06, 1987 and recorded in the Essex County Clerks Office on November 02, 1987 in Deed Book 897 at Page 36.

~ Tax Map No. 33.15-1-5.100 ~

~ Map Completed: June 11, 2026 ~

N

W E

S

GRID NAD 83 (2011) NEW YORK EAST

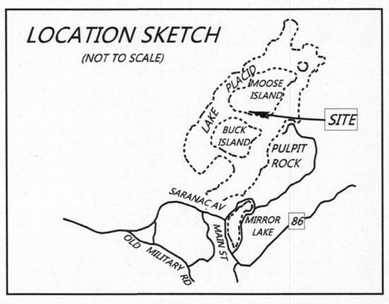

FOUND 3/4" IRON PIPE WITH CAP

N 77°08'51" W
15.51'

FOUND 5/8" IRON ROD

N 78°22'25" W
84.38'

FOUND 3/4" IRON PIPE WITH CAP 0.19' NORTH OF LINE

143.09'

58.71'

FOUND DRILL HOLE IN STONE

S 78°28'02" E

41.18'

FOUND 3/4" IRON PIPE WITH CAP STAMPED "6-7" 0.33' NORTH OF LINE

[S 63°04'00" E]

142.89'

101.71'

FOUND 3/4" IRON PIPE WITH CAP STAMPED "7-8"

S 78°27'05" E

96.92'

FOUND 3/4" IRON PIPE

REPUTED OWNER
State of New York

Tax Map No. 33-5-12.000

MOOSE ISLAND

REPUTED OWNER
Brian W. Bliss and Janet H. Bliss
Deed Book 822 ~ Page 72

Tax Map No. 33.15-1-5.200

N 8°38'22" W

[N 6°45'40" E]

452.60'

457.80'

OLD LOT LINE

REPUTED OWNER
James L. Fosshage and Judith W. Fosshage
Deed Book 485 ~ Page 262

Tax Map No. 33.15-1-6.000

S 8°39'02" E

445.72'

[S 6°45'00" W] [DEED]

468.02'

1.42 Acres

LOT 4

LOT 5

LOT 6

LOT 7

LOT 8

ELECTRIC METERS

ELECTRIC TRANSFORMER

EM

FOUND 3/4" IRON PIPE WITH CAP

FOUND 5/8" IRON ROD

N 69°56'19" W
14.97'

N 69°18'54" W

153.91'

BURIED ELECTRIC

SEWER PUMP (S)

17.9'

2 STORY FRAME DWELLING

24.5'

DECK

DECK

FLAGSTONE

DOCK

5.20'

N 81°06'43" W

140.74'

WATERLINE

22.30'

FOUND 3/4" IRON PIPE WITH CAP STAMPED "7-8"

POINT

LAKE PLACID

30' 0 30' 60'

Scale: 1" = 30'

Unauthorized alterations or additions to a survey map bearing a licensed land surveyors seal is a violation of Section 7209, sub-division 2, of the New York State Education Law.

A copy of this document without a proper application of the surveyors embossed seal should be assumed to be an unauthorized copy.

Ownership hereon is per county records indicated on plat or in title work and / or ownership certificates provided by others and is subject to any findings of an accurate abstract of title.

The location of underground improvements or encroachments are not always known and often must be estimated. If any underground improvements or encroachments exist or are shown, the improvements or encroachments are not covered by this certificate.

Building offsets, as shown on this map, are not to be used for construction purposes.

Assumed road lines shown heron based upon deeds of record, and subject to any right, title or interest the public may have to that portion used for highway purposes.

Certifications shall run only to the person for whom the survey was prepared and on his or her behalf to the Title Company, Governmental Agency, and Lending Institution listed hereon. Certifications are NOT TRANSFERABLE to additional institutions or subsequent owners.

© 2026 Reproductions or copying of this document may be a violation of copyright law unless permission of the author and / or copyright holder is obtained.

A.L.L. Land Surveying
Alan L. Latourelle
Professional Land Surveyor
License No. 050365
7 Saranac Lane
Saranac Lake, New York 12983
(518)891-0369
alan.latourelle@verizon.net

I hereby certify to:

Peter Holderied and Kim Holderied

That this map was prepared from a field survey of the premises shown hereon completed on June 3, 2026.

Map No. 26659

RECEIVED
ADIRONDACK PARK AGENCY
SEP - 9 2026

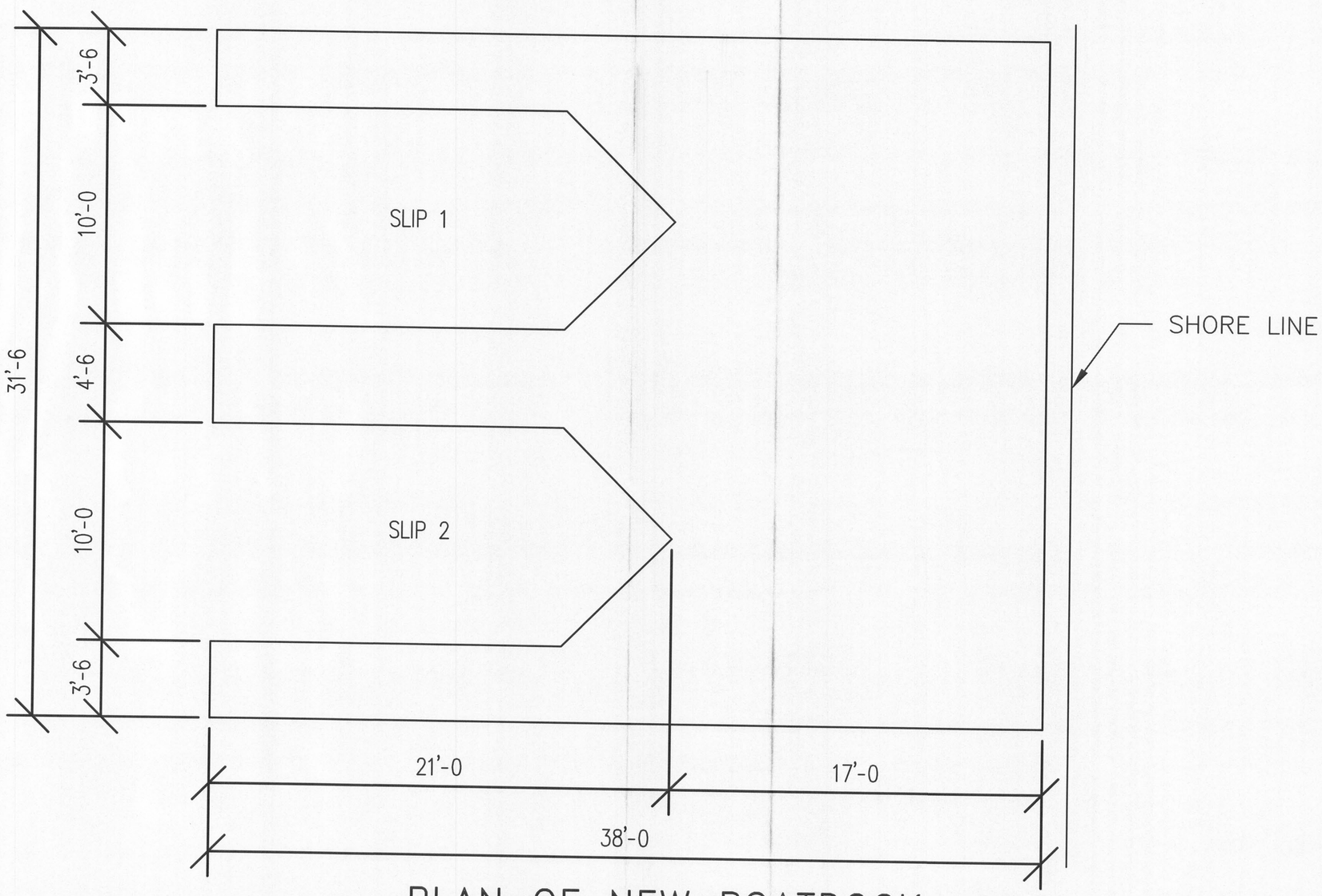

PLAN OF NEW BOATDOCK

PROJECT:

HOLDERIED DOCK

LAKE PLACID, NY 12946

CONTRACTOR:

PETER HOLDERIED

18 HIGHLAND PL.

LAKE PLACID, NY 12946

H&M STEEL

FABRICATION & DESIGN

61 TRADE ROAD

PLATTSBURGH, NY 12901

PHONE: (518)-563-9557 FAX (518)-563-9558

Job #. 26-1386

DATE: 8/17/26

Drawn by DDJ

Checked by

Sheet.

E1

Print Record

1	APPL	9/1

RECEIVED
ADIRONDACK PARK AGENCY
SEP - 9 2026

0072

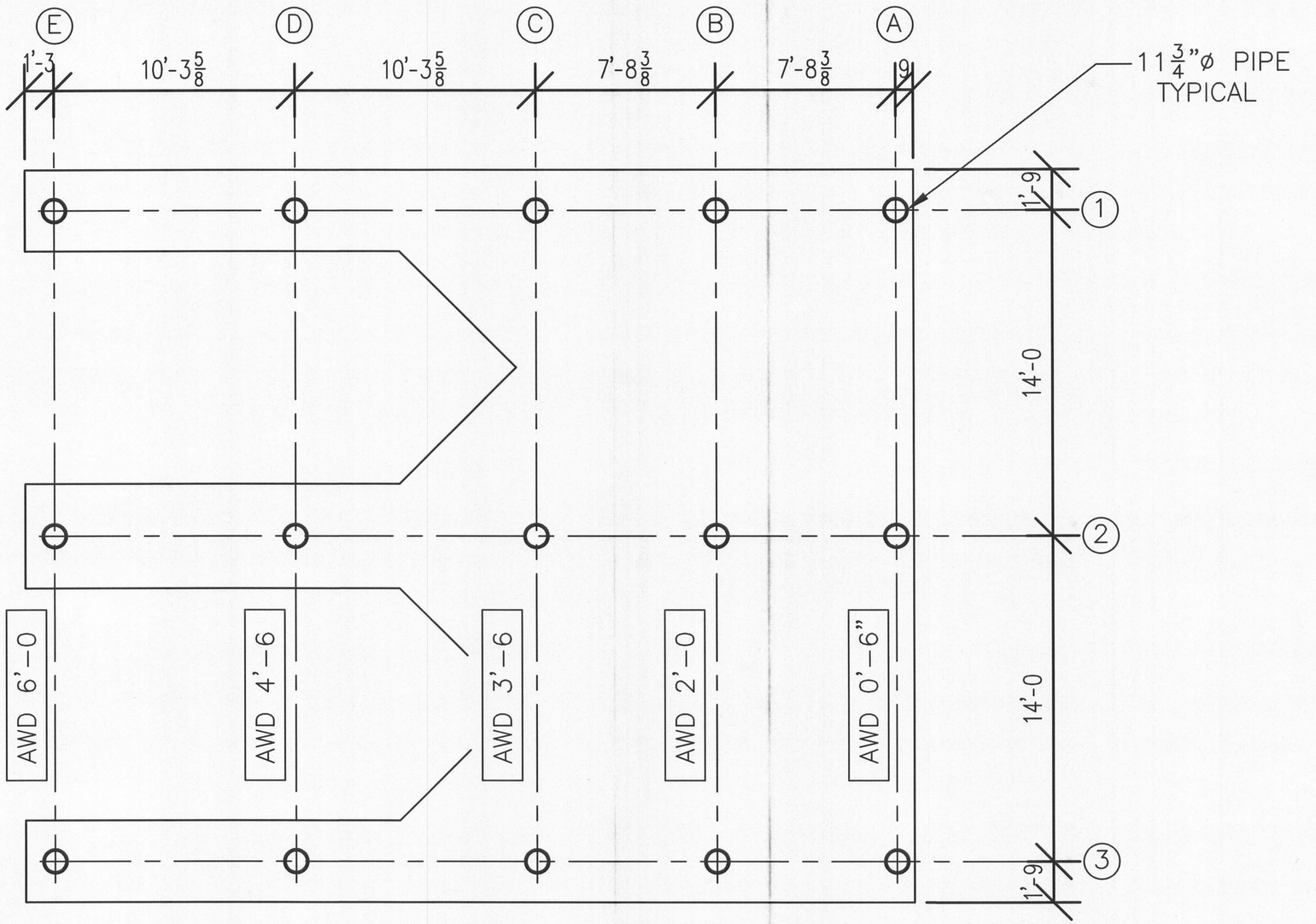

PLAN OF CAISSON LATOUT

PROJECT:

HOLDERIED DOCK

LAKE PLACID, NY 12946

CONTRACTOR:

PETER HOLDERIED

18 HIGHLAND PL.

LAKE PLACID, NY 12946

H&M STEEL

FABRICATION & DESIGN

61 TRADE ROAD

PLATTSBURGH, NY 12901

PHONE: (518)–563–9557 FAX (518)–563–9558

Job #. 26–1386

DATE: 8/17/26

Drawn by DDJ

Checked by

Sheet.

E2

Print Record

1	APPL	9/1

RECEIVED
ADIRONDACK PARK AGENCY
SEP - 9 2026

0073

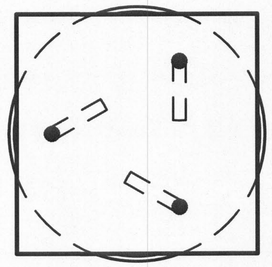

SECT 1

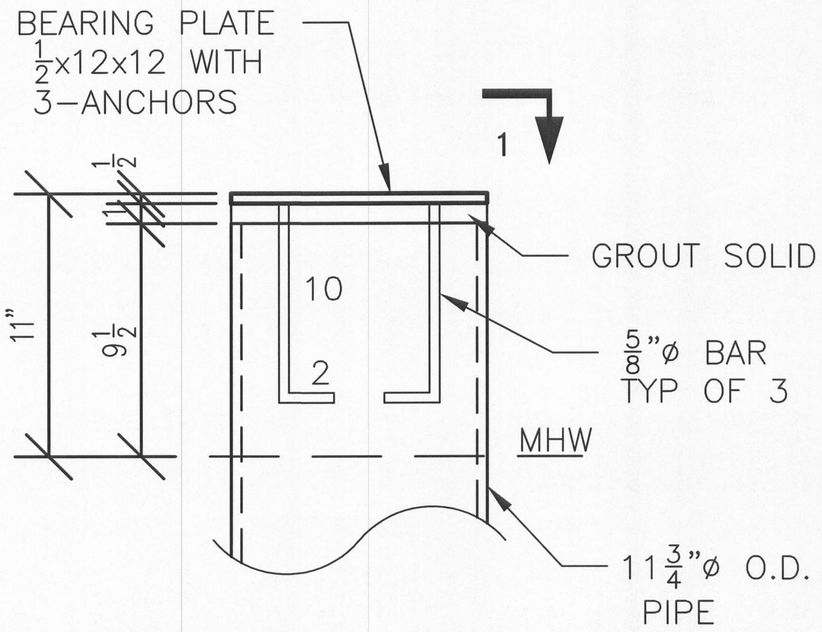

TYP. CAISSON DETAIL

CAISSON LOCATION AND ESTIMATED LENGTH

LOCATION	DRIVE DEPTH	WATER DEPTH	TOTAL LENGTH
A1,A2,A3	8'-0"	0'-0 TO 0'-6"	10-0
B1,B2,B3	8'-0"	2'-0	11'-0
C1,C2,C3	8'-0	3'-6	12'-0
D1,D2,D3	8'-0"	4'-6	14'-0
E1,E2,E3	8'-0"	6'-0	16'-0

TOTAL CU. YRDS. CONCRETE FILL REQUIRED. 1.638

PROJECT:
HOLDERIED DOCK

LAKE PLACID, NY 12946

CONTRACTOR:
PETER HOLDERIED
18 HIGHLAND PL.
LAKE PLACID, NY 12946

H&M STEEL
FABRICATION & DESIGN
61 TRADE ROAD
PLATTSBURGH, NY 12901
PHONE: (518)-563-9557 FAX (518)-563-9558

Job #. 26-1386
DATE: 8/17/26
Drawn by DDJ
Checked by

Sheet.
E3

Print Record

1	APPL	9/1

RECEIVED
ADIRONDACK PARK AGENCY
SEP - 9 2026
0074

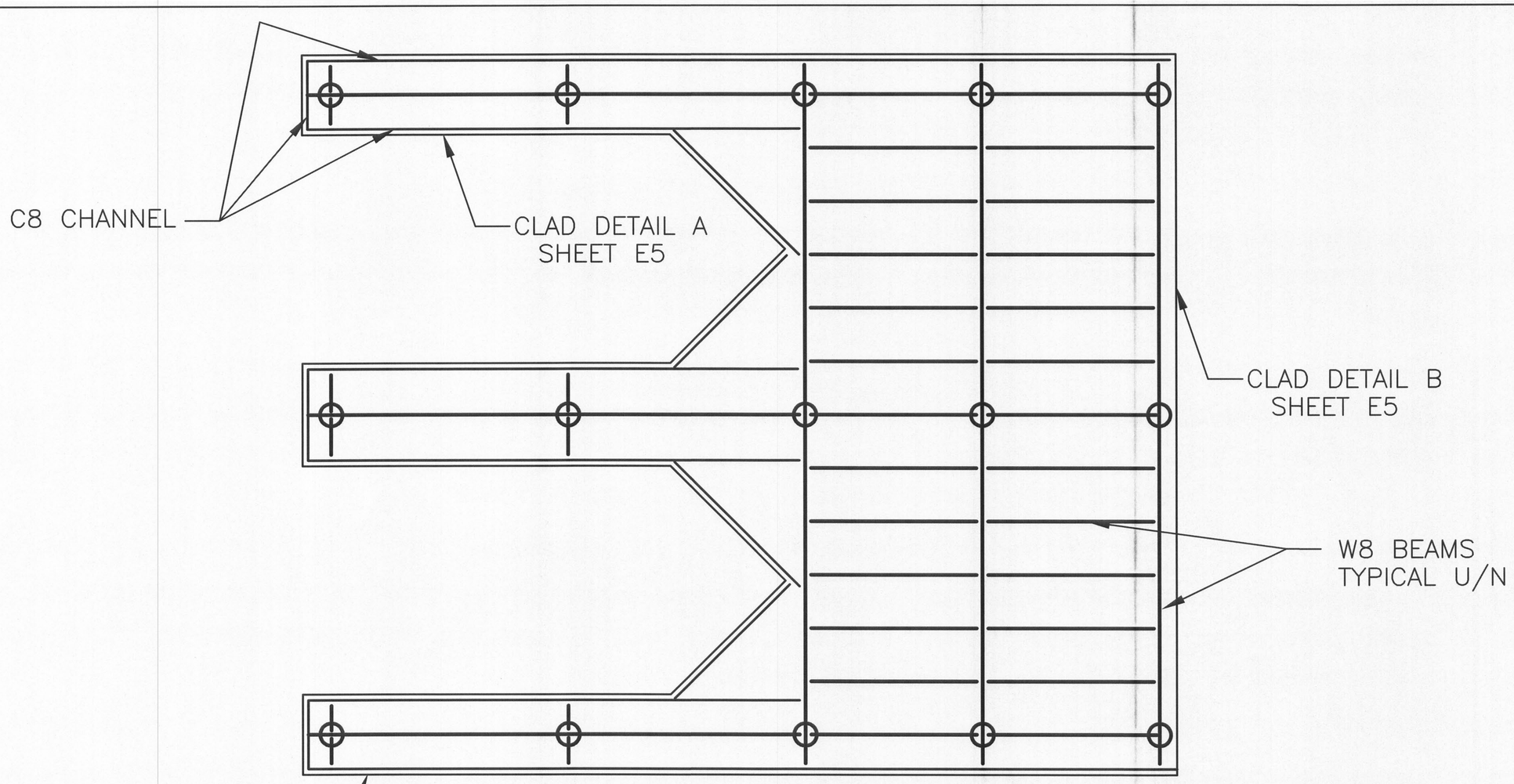

PLAN OF STEEL FRAMING

1.) ALL STEEL BEAMS TO BE ASTM A992 GRADE 50.
2.) ALL STEEL BARS TO BE ASTM A36.
3.) ALL STEEL CONNECTION BOLTS TO BE ASTM A325.
4.) ALL CARRIAGE BOLTS TO BE GRADE 2 GALVANIZED.
5.) ALL STEEL BEAMS TO BE PAINTED ONE SHOP COAT GRAY PRIMER.
6.) ALL BEAMS TO BE ERECTED WITH PC. MARKS TOP AS SHOWN ON PLAN.

PROJECT:
HOLDERIED DOCK

LAKE PLACID, NY 12946

CONTRACTOR:
PETER HOLDERIED
18 HIGHLAND PL.
LAKE PLACID, NY 12946

H&M STEEL
FABRICATION & DESIGN
61 TRADE ROAD
PLATTSBURGH, NY 12901
PHONE: (518)-563-9557 FAX (518)-563-9558

Job #. 26-1386
DATE: 8/17/26
Drawn by DDJ
Checked by

Sheet.
E4

Print Record

1	APPL	9/1

0075

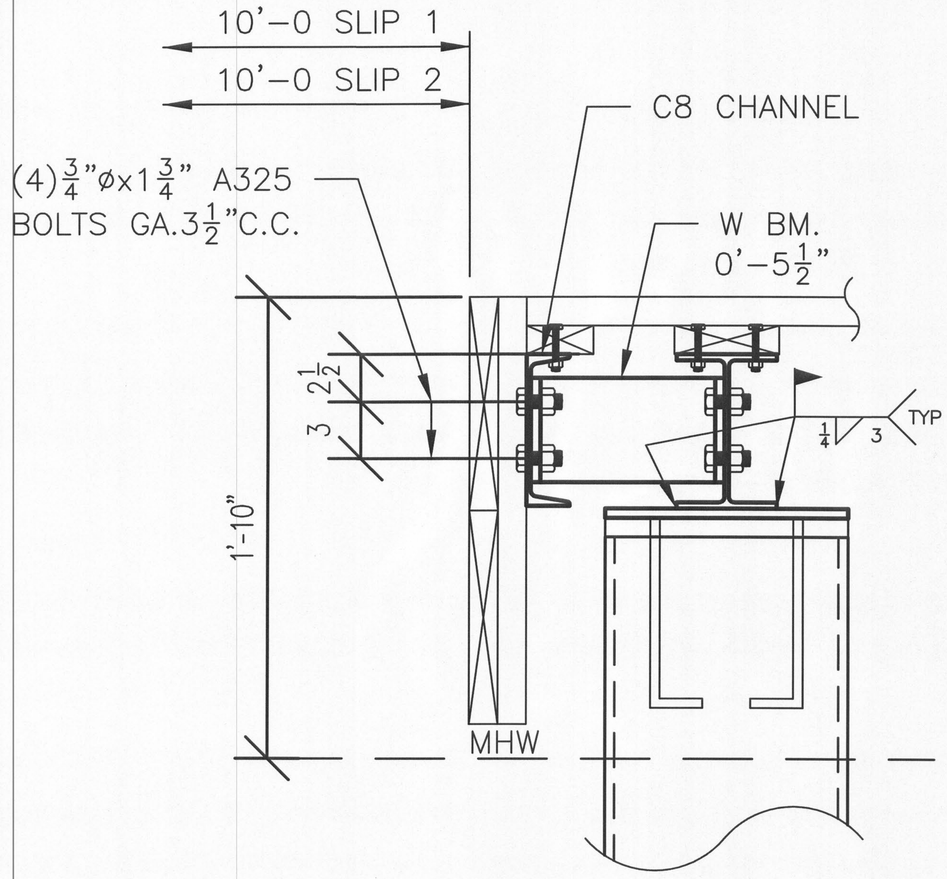

SLIP FRAMING
BEAM CLADDING "A"

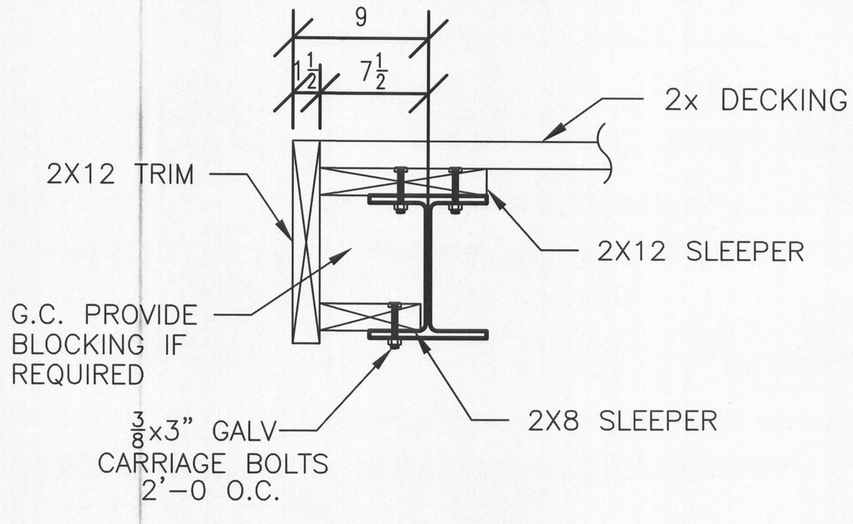

BEAM CLADDING "B"

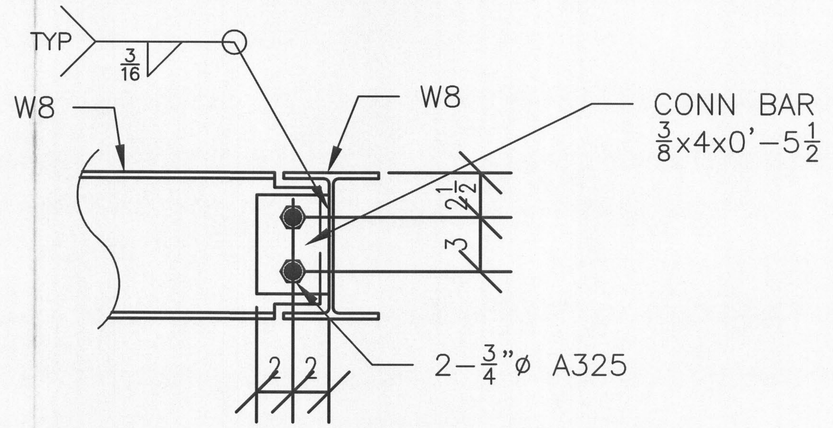

TYP. BM CONN.

PROJECT:
HOLDERIED DOCK

LAKE PLACID, NY 12946

CONTRACTOR:
PETER HOLDERIED
18 HIGHLAND PL.
LAKE PLACID, NY 12946

H&M STEEL
FABRICATION & DESIGN
61 TRADE ROAD
PLATTSBURGH, NY 12901
PHONE: (518)-563-9557 FAX (518)-563-9558

Job #. 26-1386
DATE: 8/17/26
Drawn by DDJ
Checked by

Sheet.
E5

Print Record

1	APPL	9/1

RECEIVED
ADIRONDACK PARK AGENCY
SEP - 9 2026

0076

From: Amos, Benjiman (APA)
To: [redacted]
Subject: APA Variance Application P2024-0328 - continuation
Date: Thursday, September 10, 2026 10:50:00 AM
Attachments: [redacted]

Good morning Peter,

Thank you for your 9/9/26 submission of a variance application, survey map, dock plans, and cover letter referencing Agency pre-application file A2024-0090. Your submissions will be saved under the existing project number P2024-0238, associated with the variance application received November 18, 2024. After review of the cover letter and as described in the Agency's December 10, 2024 letter (attached), submission of Appendix B (attached) and associated narrative, specific to the Variance Justification items described in the appendix, will be required before further review can occur.

Thank you,
Ben

Benjiman Amos
Environmental Program Specialist 2

Adirondack Park Agency
P.O. Box 99
1133 State Route 86
Ray Brook, NY 12977

(518) 891-4050 | Benjiman.Amos@apa.ny.gov
www.apa.ny.gov

CONFIDENTIALITY NOTICE: This email, including any attachments, may be confidential, privileged or otherwise legally protected. It is intended only for the addressee(s). If you are not the intended recipient, you are prohibited from disseminating, copying or otherwise using this email or its attachments. If you have received this email in error, please notify the sender immediately by reply email and delete the email from your system.

NEW YORK STATE OF OPPORTUNITY. Adirondack Park Agency
RECEIVED
Date: September 14, 2026

ADIRONDACK PARK AGENCY
Division of Regulatory Programs
PO Box 99, 1133 NYS Route 86
Ray Brook, New York 12977
Telephone (518) 891-4050
www.apa.ny.gov

NEW YORK STATE OF OPPORTUNITY. Adirondack Park Agency

APPLICATION FOR VARIANCE FROM SHORELINE RESTRICTIONS

APPENDIX B

Appendix B

Expansion of an existing structure other than a single family dwelling within the shoreline setback

1. Please check which of the following applies to the proposal within the shoreline setback area:[1]

   ☐ Closer: The structure will be located closer to the mean high water mark than the closest point of the existing structure.

   ☒ Width: The structure will be wider than the widest point of the existing structure, as viewed from the shoreline.

   ☐ Height: The structure will be taller than the highest point of the existing ridgeline within the shoreline setback area. *Note that a minor increase in height may not require a variance as described in question 2(d) below.

   ☒ Footprint: The structure will have a greater footprint, including in-fills, within the shoreline setback area.

2. Please evaluate the alternatives listed below. If any of the following alternatives could meet the applicant's objectives, please contact the Agency before completing the remainder of this application because a variance may not be required. If the alternatives listed below are not feasible, please provide a narrative describing why and include any supporting documentation:

   a. construction outside the shoreline setback area;
   b. use of existing lawful footprints within the shoreline setback area;
   c. construction of a boathouse and/or dock that meets Agency regulations; or
   d. construction of a "minor expansion" of an existing lawful structure:

      - For accessory structures[2] constructed before August 1, 1973 (other than docks, boathouses, decks, and dams), up to 100 square feet of new footprint may be added to the rear (non-shoreline side) of the existing structure, and the structure may be increased up to two feet in height.

---

[1] Note that boathouses and docks are subject to different parameters for replacement and expansion. Please contact the Agency for additional information.

[2] Examples of accessory structures subject to this provision include garages, gazebos, fences, and sheds.

- For principal buildings[3] constructed before August 1, 1973 (other than single family dwellings and mobile homes), up to 100 square feet of new footprint may be added to the rear (non-shoreline side) of the existing structure, and the structure may be increased up to two feet in height.[4]
- For decks constructed before August 1, 1973, up to 100 square feet of new deck may be added to the rear (non-shoreline side) of the existing deck.[5]
- Dams may be expanded in height and footprint pursuant to engineered plans and an engineer's certification showing that 1) the modified dam will result in the same "normal pool elevation" for the impoundment, and 2) the modified dam has been designed in accordance with the engineering criteria for New York State Department of Environmental Conservation dam safety.[6]

3. Is there an on-site wastewater treatment system that will be impacted by the proposal? If yes, please provide a detailed design report and plans prepared by a NYS licensed professional engineer for any new, expanded, or replacement on-site wastewater treatment system. Alternatively, provide an evaluation prepared by a NYS licensed professional engineer of the existing system that demonstrates compliance with applicable local and state standards. For additional information, please refer to the Agency's publication "Minimum Requirements for Engineering Plans for On-Site Wastewater Treatment Systems," available at https://www.apa.ny.gov/Documents/Guidelines/OnSite_Wastewater.pdf.

4. Attach a plan sheet(s) depicting the existing and proposed structure(s) prepared by a qualified professional (NYS licensed surveyor, engineer, architect, etc.) and clearly labeled to scale, with the date of preparation and name of preparer. The plan sheet should clearly depict any expanded width or footprint in the setback area.

5. If the proposal will result in an increase of more than two feet in height, provide to-scale elevation views of the existing and proposed structure(s) clearly depicting any proposed height increase.

6. For buildings, provide a floor plan prepared by a qualified professional (NYS licensed surveyor, engineer, architect, etc.) and clearly labeled to scale with the date of preparation and name of preparer.

7. Attach a site plan map prepared by a qualified professional (NYS licensed surveyor, engineer, architect, etc.) and clearly labeled with the scale, north arrow, date of

---

[3] Examples of principal buildings subject to this provision include certain commercial use structures, such as restaurants and retail shops, and certain tourist accommodation structures.

[4] For expansion of an existing single family dwelling or mobile home, please use "Appendix A, Expansion of an Existing Single Family Dwelling within the Shoreline Setback."

[5] An existing deck attached to a single family dwelling or mobile home is considered a part of that residential structure. Therefore, attached decks are subject to the expansion provisions for dwellings and mobile homes; please use "Appendix A, Expansion of an Existing Single Family Dwelling within the Shoreline Setback."

[6] Note that components not considered to be part of the dam, such as decks, viewing platforms, and detached rip-rap may require a variance.

PROJECT NARRATIVE

Peter & Kim Holderied
18 Highland Place
Lake Placid, NY 12946

Associated Variance Narrative: p2024-0328

The requested variance is necessary primarily because of the deteriorated condition of the existing dock and my desire to increase the width of the existing two boat slips so they can safely accommodate the larger boats commonly used today.

The proposed improvement will not negatively change the character of the shoreline. The project involves replacing an existing two-slip dock with a slightly larger open, two-slip steel dock and will not increase the number of slips or change the existing waterfront use.

The proposed structure will also have a significantly different visual impact than a two-slip boathouse. Unlike a boathouse, the proposed dock will remain an open structure without walls or a roof, minimizing its visual presence from the water and surrounding shoreline.

I believe the proposed replacement will therefore maintain the existing character of the shoreline while improving the condition, safety, durability, and functionality of the existing dock. The modest increase in dock width is necessary to accommodate modern boats and does not represent a substantial intensification of the existing use.

For these reasons, I respectfully submit that the requested variance will not create an adverse visual impact or negatively alter the existing character of the shoreline, particularly when compared with the substantially greater visual presence that would result from a two-slip boathouse.



Peter Holderied
Phon[redacted]
Email

NEW YORK STATE | Adirondack Park Agency

PUBLIC NOTICE
VARIANCE APPLICATION RECEIVED
PROJECT NO. 2024-0328

Date: September 14, 2026

The purpose of this Notice is to inform you that the Variance application described below was received by the Adirondack Park Agency on **November 18, 2024** and to solicit any written comments you may have regarding it at this time. It is not necessary to respond to this notice unless you want to do so. If you wish to provide written comments, mail them to **Benjiman Amos**, the assigned APA Environmental Program Specialist 2 (EPS2).

When all of the required variance application information has been provided, Agency staff will schedule a public hearing for presentation and discussion of the requested variance and a Notice of Variance Hearing will be published in a local paper. A copy of the Hearing Notice will also be mailed to: the applicant; the property owner (if other than the applicant); landowners within 500 feet of the property; the Chairman of the County Planning Board; the Chairman of the Regional Planning Board, if any; the chief elected officer, clerk and planning board chairman, if any, of the town or village where the project is located; and the Adirondack Park Local Government Review Board. The Hearing Notice will contain more detailed information about the requested variance and will include the hearing date and location. You will then have another opportunity to provide comment relevant to the Agency's review of the requested variance.

VARIANCE APPLICANT, LOCATION AND DESCRIPTION

The Agency received an application on **November 18, 2024** and additional information on **September 14, 2026** for a variance from the Adirondack Park Agency Act shoreline restrictions proposed by **Peter & Kim Holderied** in the Town of **North Elba, Essex** County, on or near **12 George & Bliss Ln Pier 410** in an area designated as **Rural Use** on the Adirondack Park Land Use and Development Plan Map. The tax map number of the variance location is: Section **33.15,** Block **1,** Parcel **5.100.** The attached map shows the approximate location of the variance location. The Agency is currently reviewing the application to determine if additional information is necessary.

The Variance Request is briefly described as follows: **Variance request for the replacement and expansion of a non-conforming dock measuring 28.5 feet in width with a dock measuring 31.5 feet in width to accommodate two 10-foot-wide boat slips.**

9/14/2026
Date

John M. Burth
Deputy Director, Regulatory Programs

cc: Peter & Kim Holderied
Adjoining Landowners
Town, County & LGRB Officials

Enc: Variance Process Summary

Project Site for APA Variance P2024-0328

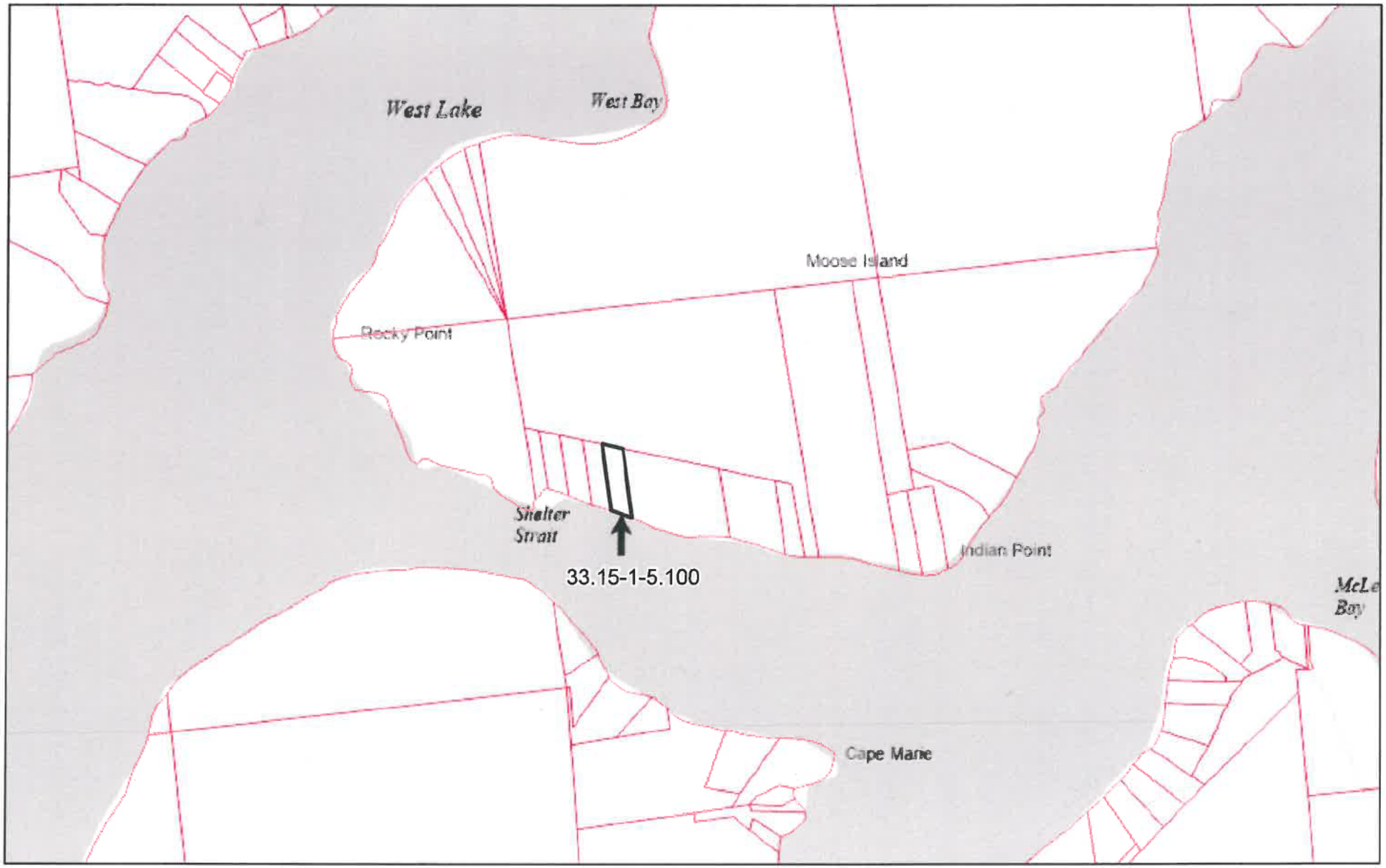

9/14/2026, 11:11:52 AM

0082

1:16,127

0 0.1 0.2 0.4 mi

0 0.15 0.3 0.6 km

NYS Adirondack Park Agency

NEW YORK STATE | Adirondack Park Agency

September 29, 2026

Peter Holderied
[redacted]

Re: Variance Application 2024-0328
Town of North Elba, Essex County
Land Use Area: Rural Use
Tax Map No.: 33.15-1-5.100

Dear Peter Holderied:

On September 8, 2026, the Agency received your variance application, survey map, dock plans, and cover letter. On September 14, 2026, the Agency received a portion of Variance Appendix B and an additional narrative. The provided cover letter and additional narrative are not directly responsive to the variance justification criteria (a through g) outlined in Item 9 of Appendix B (attached). Narrative responses specific to each of the variance justification criteria is required before further review can occur.

As part of the variance review process, Agency regulations require consideration of whether the variance can be avoided and whether the application requests the minimum variance necessary, and this evaluation must be documented in the variance application record. Accordingly, to allow the Agency to evaluate the variance request, please carefully consider, evaluate, and address each of the following potential alternatives that would not require a variance in a supporting narrative:

- Replacing the existing crib-supported dock with a caisson-supported dock of the same deck dimensions;
- Replacing the existing dock footprint without the 3-foot, 6 inch central dock finger to accommodate wider boats;
- Constructing separate docks measuring less than 8 feet in width, separated by a minimum of 3 feet;
- A re-configuration resulting in connected docks, with all dock dimensions measuring 8 feet or less in width (including at the shoreline);
- Construction of a boathouse (including open-wall boathouse) that meets the Agency boathouse definition, including a maximum footprint of 1,200 square feet and maximum height of 15 feet; and
- Any other feasible alternative that would comply with the Agency's shoreline restrictions.

Please contact me if you have any questions regarding this letter.

Sincerely,

Benjiman J. Amos
Environmental Program Specialist 2 (EPS2)

Enc: Variance Application Appendix B

P.O. Box 99 | 1133 State Route 86 | Ray Brook, NY 12977 | Tel: (518) 891-4050 | www.apa.ny.gov

From: [redacted]
To: [redacted]
Cc: [redacted]
Subject: Re: F2024-0328 letter
Date: Wednesday, September 30, 2026 11:26:02 AM

Attention This email came from an external source. Do not open attachments or click on links from unknown senders or unexpected emails.

Dear Stephanie and Benjamin

I have considered all of the alternatives listed as well as ideas from
other staff members 2 years ago.
The proposed dock is less than 10% larger than the existing structure.
All of the proposed (solutions)
by the APA staff would create a dock less desirable than the existing one.
I do not want to be forced to build a boathouse because APA
regulations are more important than maintaining
a less impactful viewshed that a dock would create relative to a boathouse.

I would like to proceed with the variance application as presented.

Thank You

Peter

On Tue, Sep 29, 2026 at 1 14 PM Petith, Stephanie L (APA)
<Stephanie.Petith@apa.ny.gov> wrote
>
> Please see attached ….
>
>
>
> Stephanie L. Petith
>
> Administrative Assistant 1
>
>
>
> NYS Adirondack Park Agency
>
> PO Box 99
>
> 1133 NYS Route 86
>
> Ray Brook, NY 12977
>
>
>
> (518) 891-4050 | Stephanie.Petith@apa.ny.gov

[redacted]

>
>
> CONFIDENTIALITY NOTICE This email, including any attachments, may be confidential, privileged or otherwise legally protected. It is intended only for the addressee(s). If you are not the intended recipient, you are prohibited from disseminating, copying or otherwise using this email or its attachments. If you have received this email in error, please notify the sender immediately by reply email and delete the email from your system.
>
>

From: Amos, Benjiman (APA)
To: [redacted]
Subject: RE: P2024-0328 letter
Date: Thursday, October 1, 2026 10:38:00 AM

Good morning Peter,

Your below email has been received. I will follow up with you after determining the next procedural steps.

Thank you,

Benjiman Amos
Environmental Program Specialist 2

Adirondack Park Agency
P.O. Box 99
1133 State Route 86
Ray Brook, NY 12977

(518) 891-4050 | Benjiman.Amos@apa.ny.gov
www.apa.ny.gov

CONFIDENTIALITY NOTICE: This email, including any attachments, may be confidential, privileged or otherwise legally protected. It is intended only for the addressee(s). If you are not the intended recipient, you are prohibited from disseminating, copying or otherwise using this email or its attachments. If you have received this email in error, please notify the sender immediately by reply email and delete the email from your system.

-----Original Message-----
From: Peter Holderied[redacted]
Sent: Wednesday, September 30, 2026 11:26 AM
To: Petith, Stephanie L (APA) <Stephanie.Petith@apa.ny.gov>
Cc: Amos, Benjiman (APA) <Benjiman.Amos@apa.ny.gov>
Subject: Re: P2024-0328 letter

Attention: This email came from an external source. Do not open attachments or click on links from unknown senders or unexpected emails.

Dear Stephanie and Benjamin

I have considered all of the alternatives listed as well as ideas from other staff members 2 years ago.
The proposed dock is less than 10% larger than the existing structure.
All of the proposed (solutions)
by the APA staff would create a dock less desirable than the existing one.
I do not want to be forced to build a boathouse because APA regulations are more important than maintaining a less impactful viewshed that a dock would create relative to a boathouse.

I would like to proceed with the variance application as presented.

Thank You

Peter

On Tue, Sep 29, 2026 at 1:14 PM Petith, Stephanie L (APA) <Stephanie.Petith@apa.ny.gov> wrote:
>
> Please see attached…..

>
>
>
> Stephanie L. Petith
>
> Administrative Assistant 1
>
>
>
> NYS Adirondack Park Agency
>
> PO Box 99
>
> 1133 NYS Route 86
>
> Ray Brook, NY 12977
>
>
>
> (518) 891-4050 | Stephanie.Petith@apa.ny.gov
>
> https://gcc02.safelinks.protection.outlook.com/?url=http%3A%2F%2Fwww.a
> pa.ny.gov%2F&data=05%7C02%7CBenjiman.Amos%40apa.ny.gov%7Cc4093549dcc04
> 999167708df1f072118%7Cf46cb8ea79004d108ceb80e8c1c81ee7%7C0%7C0%7C63926
> 3787614206441%7CUnknown%7CTWFpbGZsb3d8eyJFbXB0eU1hcGkiOnRydWUsIlYiOiIw
> LjAuMDAwMCIsIlAiOiJXaW4zMiIsIkFOIjoiTWFpbCIsIldUIjoyfQ%3D%3D%7C0%7C%7C
> %7C&sdata=dtRDuTC0E3gKRLrAlrV2b6HeaCsU0AxELjEv3UJuUko%3D&reserved=0
>
>
>
> CONFIDENTIALITY NOTICE: This email, including any attachments, may be confidential, privileged or otherwise legally protected. It is intended only for the addressee(s). If you are not the intended recipient, you are prohibited from disseminating, copying or otherwise using this email or its attachments. If you have received this email in error, please notify the sender immediately by reply email and delete the email from your system.
>
>

From: Shubert, Benjamin M (DEC)
To: Amos, Benjiman (APA)
Subject: RE: 5-1540-00478/00001 - Holderied
Date: Wednesday, October 28, 2026 9:29:49 AM

Hi Ben,

This application has been incomplete since 2024, when Mr. Holderied said he was going to pursue an APA variance. I sent the plans that you provided to our biologist for review.

Thanks,
Ben

From: Amos, Benjiman (APA) <Benjiman.Amos@apa.ny.gov>
Sent: Wednesday, October 28, 2026 8:25 AM
To: Shubert, Benjamin M (DEC) <Benjamin.Shubert@dec.ny.gov>
Subject: 5-1540-00478/00001 - Holderied

Good morning Ben,

Could you please update me on the status of Peter Holderied's dock application, initiated in 2024? Mr. Holderied is pursuing an Agency variance for expansion of a non-conforming dock. A public hearing is scheduled for November 4th. It is anticipated that the variance request will be presented to the Agency Board for final decision at the November 19th Agency meeting.

Feel free to call if you would like to discuss.

Thank you,
Ben

Benjiman Amos
Environmental Program Specialist 2

Adirondack Park Agency
P.O. Box 99
1133 State Route 86
Ray Brook, NY 12977

(518) 891-4050 | Benjiman.Amos@apa.ny.gov
www.apa.ny.gov

CONFIDENTIALITY NOTICE: This email, including any attachments, may be confidential, privileged or otherwise legally protected. It is intended only for the addressee(s). If you are not the intended recipient, you are prohibited from disseminating, copying or otherwise using this email or its attachments. If you have

PROPERTY DETAILS - 12 GEORGE & BLISS LN, NORTH ELBA - SBL: 33.15-1-5.100 - SWIS: 154089 (NORTH ELBA)

Structure

Building 1	
Building Style	04 - Cape cod
Number of Stories	1.5
Exterior Wall Material	01 - Wood
Actual Year Built	1988
Eff. Year Built	
Year Remodeled	
Number of Kitchens	1
Number of Full Baths	1
Number of Half Baths	1
Number of Bedrooms	2
Number of Fireplaces	
Heat Type	1 - No central
Fuel Type	1 - None
Central Air	No
Basement Type	1 - Slab/pier
Total Sq Ft	1620
1st Story Sq Ft	1080
2nd Story Sq Ft	
1/2 Story Sq Ft	540
3/4 Story Sq Ft	
Additional Story Sq Ft	
Finished Attic Sq Ft	
Finished Basement Sq Ft	
Finished Rec Room Sq Ft	
Finished Over Garage Sq Ft	
Condition	4 - Good



View Property on GIS Map

2026 Final Assessment Information

Land Assessed Value	$1,032,400
Total Assessed Value	$1,370,200
Equalization Rate	100.00%
Full Market Value	$1,370,200
Partial Construction	No
County Taxable	$1,370,200
Municipal Taxable	$1,370,200
School Taxable	$1,370,200
Village Taxable	$0
Roll Section	1

Property Description

Property Location	12 George & Bliss Ln
Property Type	260 - Seasonal res
Neighborhood Code	40103 Wfrt LP, boat
SWIS	154089
Water Supply	2 - Private
Utilities	3 - Electric
Sewer Type	2 - Private
Zoning	02
School	Lake Placid
Book	897
Page	36
Grid East	629190
Grid North	2000359
Acres	1.42

Last Property Sale

No Sales Data Found

Front	0.00
Depth	0.00
Agricultural District	No
Description 1	294 Twp 11 Omt Rs
Description 2	Nly Side Shelter Strait
Description 3	Moose Island Lk Placid Lk
Account Number	675J112705
Long SBL	03301500010051000000

Owner Information

Owner Name	Address 1	Address 2	PO Box	City	State	Zip	Unit Name	Unit Number
Peter Holderied	18 Highland Pl			Lake Placid	NY	12946		
Kim Holderied	18 Highland Pl			Lake Placid	NY	12946		

Sales

Deed Date	Deed Book	Deed Page	Contract Date	Sale Date	Last Physical Inspection Date	Sale Price	Net Sale Price	Usable for Valuation	Arms Length	Prior Owner
No data available in table										

Deed References

Deed Book	Deed Page
572	95
572	97
793	267
858	177
858	180
897	36

No Exemption Data Found

Land

Site #	Land Type	Acres	Front	Depth	Sq Ft	Soil Rating
1	10 - Waterfront		160.00	200.00		
1	04 - Residual	0.69				

Improvements

Site #	Structure Code	SqFt	Dimensions	Quantity	Overall Condition	Actual Year Built	Effective Year Built
1	DK2 - Crib dock	636.00		1.00	3 - Normal	2000	
1	WB4 - Fireplc,Outdoor	60.00		1.00	3 - Normal	1988	
1	RP5 - Porch-up opn		4.00 x 8.00	1.00	3 - Normal	1988	

	1	RP5 - Porch-up opn		7.00 x 20.00	1.00	3 - Normal	1988	
	1	RP1 - Porch-open/deck	223.00		1.00	3 - Normal	1988	

Special Districts					
	Code Description	Type	Primary Units	Secondary Units	Amount
	E1647 -		0.00	0.00	$0.00
	FP403 - Fire Pro Lake	A	0.00	0.00	$1,370,200.00
	PK400 - Park District	A	0.00	0.00	$1,370,200.00

Alternative A: Replace existing dimensions with new materials.

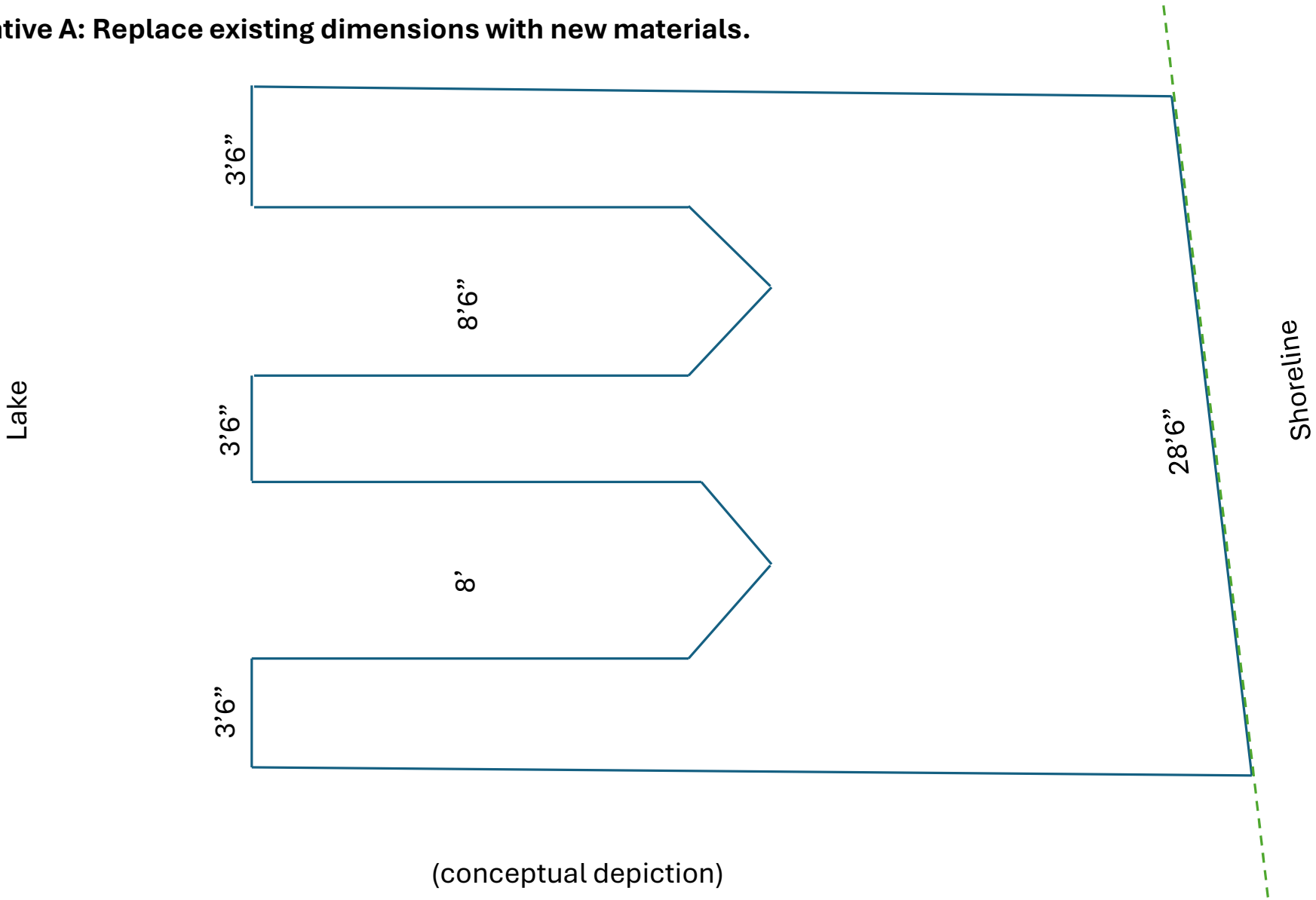

(conceptual depiction)

Alternative B: Same dimensions without central finger to accommodate two 10-foot-wide boat slips.

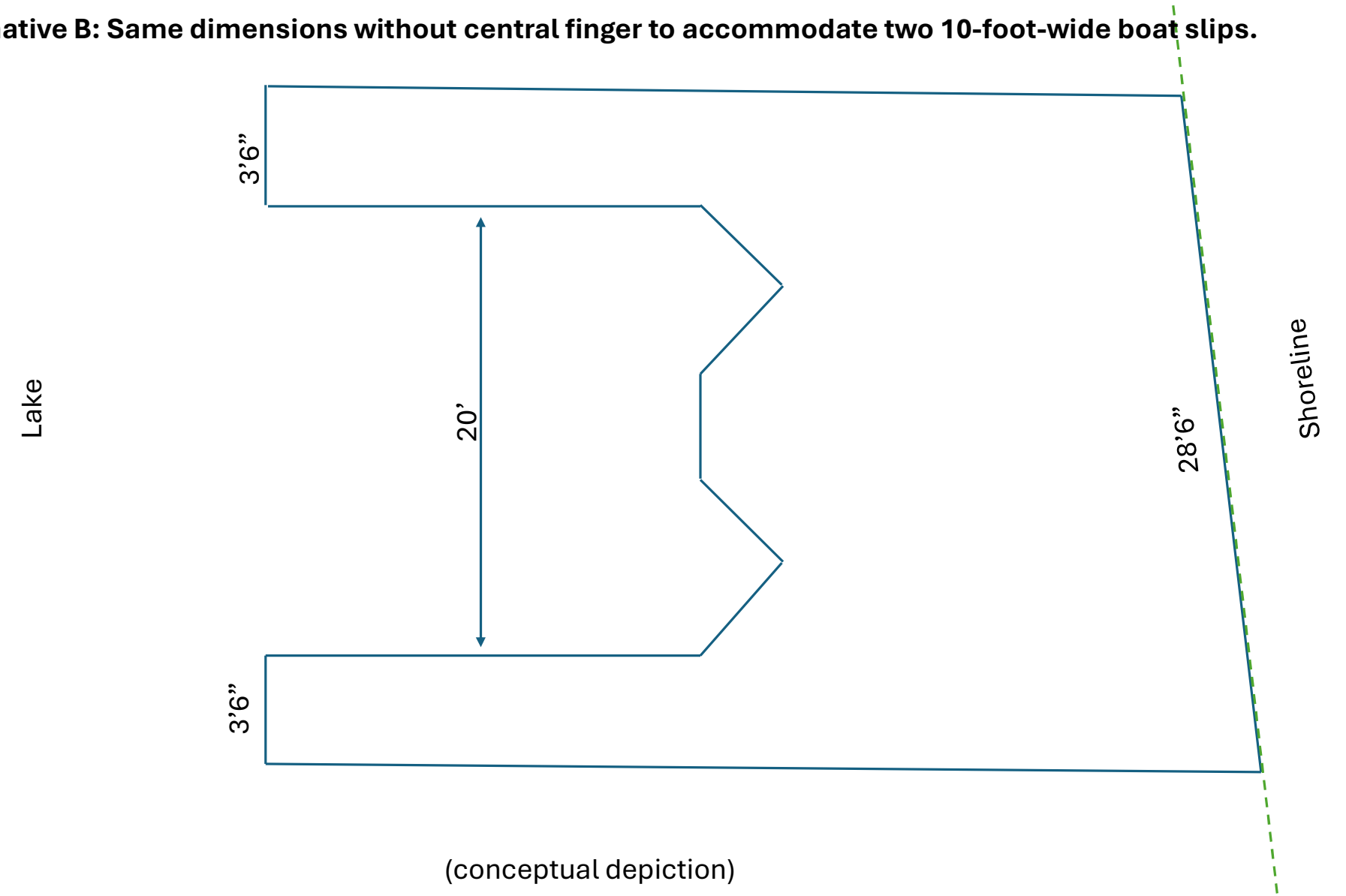

(conceptual depiction)

Alternative C: Same dimensions with reduced central finger to accommodate two 10-foot-wide boat slips.

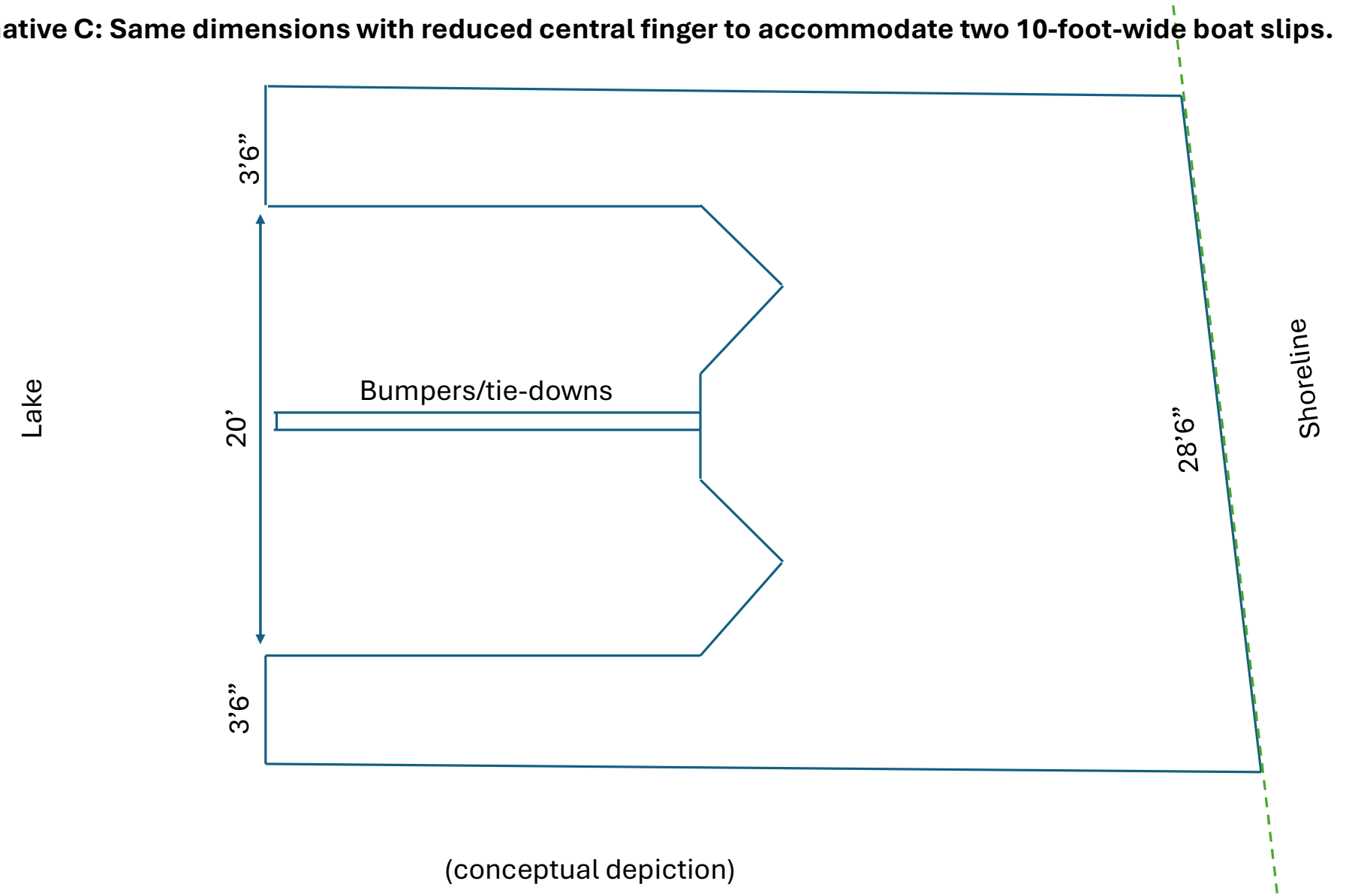

(conceptual depiction)

Alternative D: Replace existing dimensions.
Dock larger boats outside fingers.

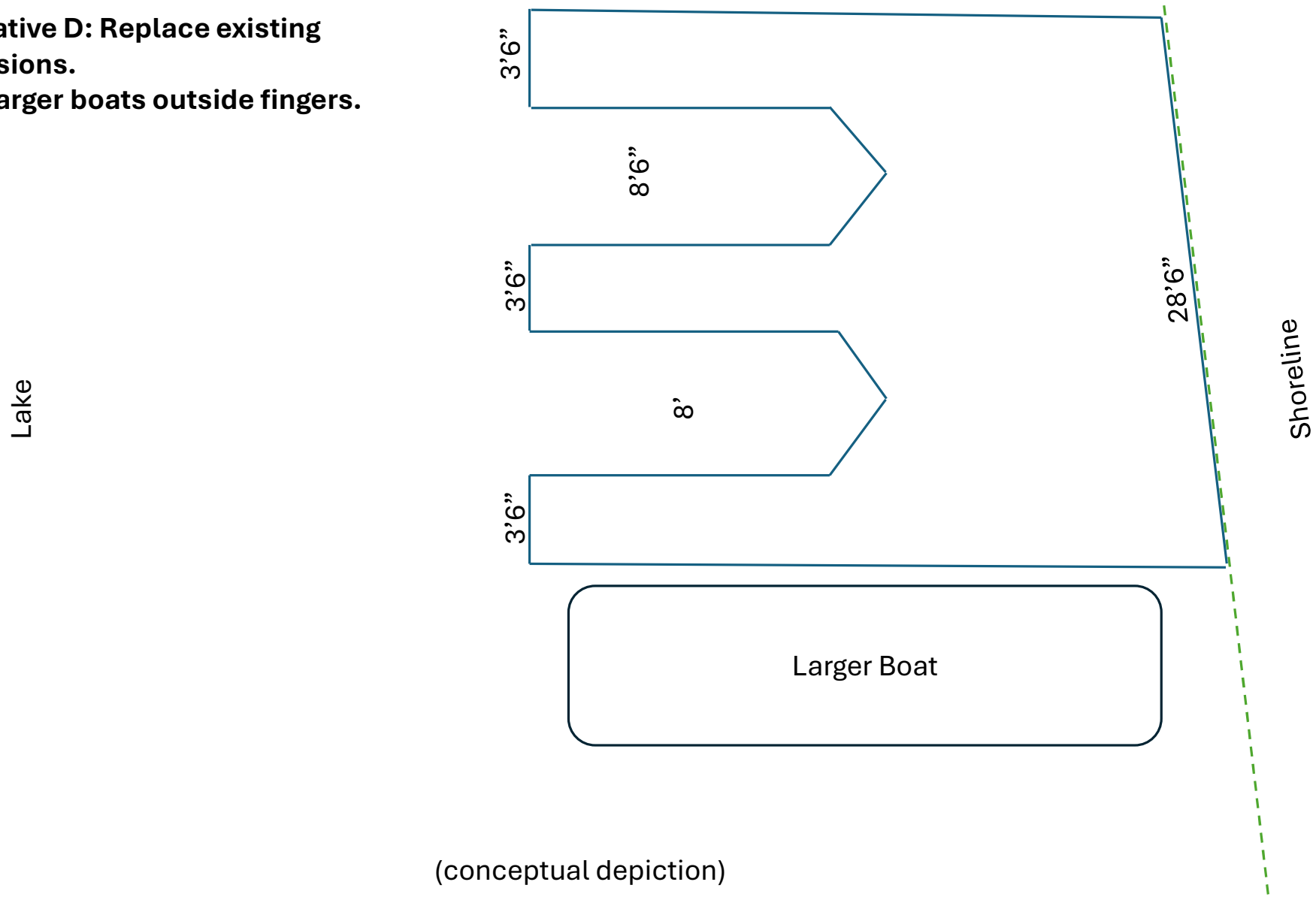

(conceptual depiction)

Alternative E: Reconfigure so all components measure less than 8 feet in width.

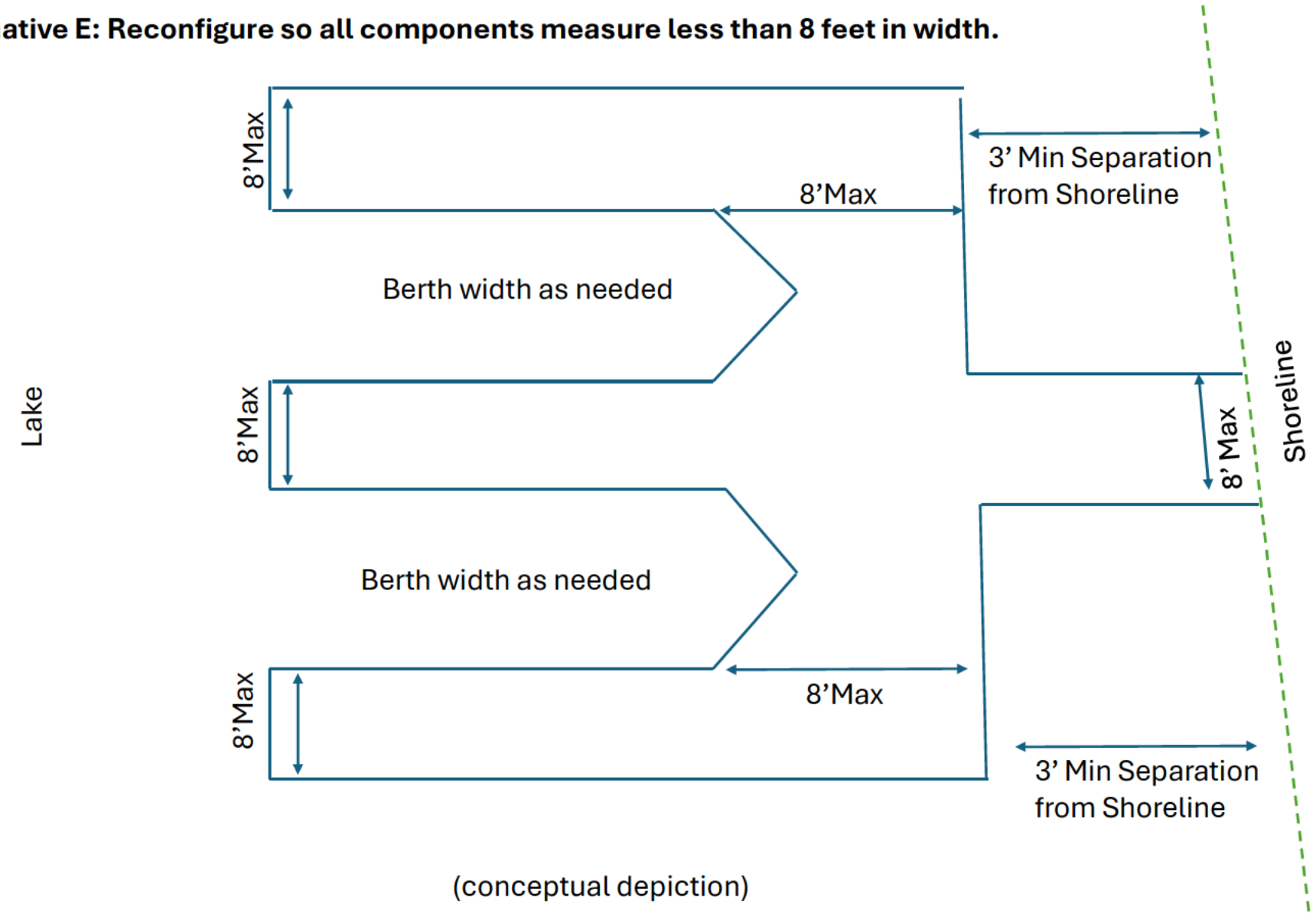

(conceptual depiction)

Alternative F: Replace with multiple docks (maximum width of 8 feet) to accommodate larger boats.

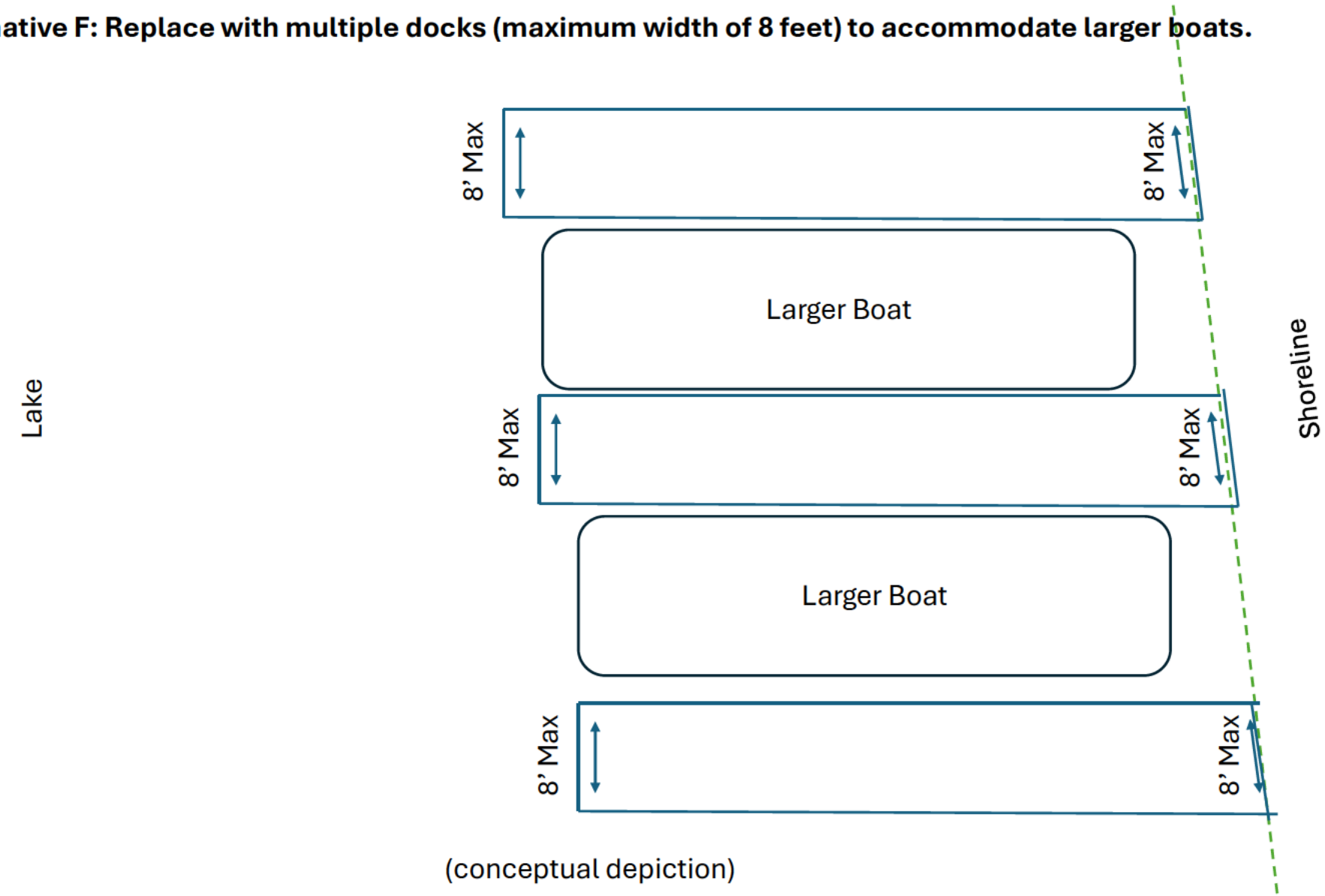

(conceptual depiction)

NEW YORK STATE | Adirondack Park Agency

Sent Certified Mail, Return Receipt Requested
Tracking No.: 9589 0710 5270 3927 2556 42

October 15, 2026

[redacted]

Re: Variance Application 2024-0328
Town of North Elba, Essex County
Land Use Area: Rural Use
Tax Map No.: 33.15-1-5.100

Dear Peter Holderied:

The Agency is in receipt of your September 30, 2026 email indicating your intent to proceed with the variance application as presented. The next step in the variance review process is a public hearing as required by §576.5 of Agency regulations.

Attached please find a Notice of Public Hearing for this matter, scheduled for November 4, 2026 from 01:00pm to 03:00pm. This hearing will take place at the Adirondack Park Agency headquarters, located at 1133 NY-86 in Ray Brook, NY.

The hearing will be conducted by an independent Administrative Law Judge, and the ultimate decision on your variance request will be reserved for the Agency Board. Assuming the hearing is held as described, the Board's Regulatory Programs Committee will vote on the proposal at the Board's November monthly meeting (Board Meeting) currently scheduled November 19 and November 20, 2026, followed by the Full Board.

The hearing is an opportunity for you as the applicant, or your authorized representative, to present the proposed project and explain the need for a variance. As applicant, you should address each of the variance justification criteria outlined below and also identified in Appendix B of the variance application (Electronic Copy Attached for reference).

Minimization:

a. Describe how the requested variance represents the minimum relief necessary from the shoreline restrictions. As part of this description, please describe and provide photographs and/or other documentation of any characteristics of the variance site that make further minimization of the request difficult or impossible. These characteristics may include the existence of boulders, wetlands, and other features, as well as the size or dimensions of the lot.

b. Describe any efforts that were made *prior* to the current proposal to minimize the request. Include a description of any efforts to minimize the footprint and width of the proposed expansion.

Potential Impacts:

c. Describe the extent to which the variance, if granted, would create impacts to the natural, scenic, open space, or other resources of the Park. Describe and provide photographs depicting the existing character of the shoreline near the variance site, on the same and opposite sides of the water body, and describe how the variance, if granted, would produce a change in the character of the shoreline in this area. Provide supporting facts and documentation.

d. Describe any potential impacts that the variance, if granted, would cause to water quality. Please include any potential benefits to water quality from the proposal.

e. Describe any other effects, such as visual impacts that the variance, if granted, would have on adjoining and nearby properties. Provide supporting facts and documentation, including photographs, as appropriate.

Variance Site History:

f. Describe how the need for a variance arose.

Adverse Consequences:

g. Describe and provide supporting documentation of any adverse consequences that would result from denial of the variance.

A computer and overhead projector will be available to present any materials that you provide at least 48 hours in advance of the hearing date.

Following your presentation, Agency staff may ask questions and may also present additional factual testimony and exhibits relating to the factors to be considered by the Board, including the variance justification criteria and alternatives analysis described in the 2nd EPS letter dated September 29, 2026 (attached).

You will also have the opportunity to ask Agency staff questions in connection with your proposal.

At the end of the hearing there will be an opportunity for members of the public to comment on the variance proposal. You will have an opportunity to respond to public comment, but you are not required to do so.

Prior to the Board Meeting, the Board will receive a copy of the variance application and any hearing materials, including a recording of the hearing, any materials presented, written public comments, and any written statements from the applicant or Agency staff.

If you do not intend to move forward with the scheduled variance hearing, please let Agency Staff know on or before October 21, 2026.

Please contact me via email or at the phone number listed above if you have any questions regarding the variance process or the hearing.

Sincerely,

Benjiman J. Amos
Environmental Program Specialist 2

Attachments: Application Appendix B, 2nd EPS letter, Notice of Variance Hearing

NEW YORK STATE | Adirondack Park Agency

NOTICE OF PUBLIC HEARING ON REQUESTED VARIANCE FROM APA ACT SHORELINE RESTRICTIONS
Project Number 2024-0328

NOTICE: THE ADIRONDACK PARK AGENCY WILL HOLD A HEARING ON A REQUESTED VARIANCE FROM APA ACT SHORELINE RESTRICTIONS, Project No. 2024-0328, pursuant to Executive Law § 806 on application of Peter & Kim Holderied for a variance in the Town of North Elba, Essex County, on Moose Island, Lake Placid, on a 1.42-acre property in a Rural Use area on the APLUDP Map; tax map number: Section 33.15, Block 1, Parcel 5.100; involving replacement and expansion of a non-conforming dock measuring 28.5 feet in width with a dock measuring 31.5 feet in width to accommodate two 10-foot-wide boat slips.

The public hearing will commence on November 4, 2026, at 01:00 P.M. at the New York State Adirondack Park Agency Headquarters, located at 1133 NY-86 in Ray Brook, NY. The public may attend in person or virtually. The hearing will be accessible on the web: https://tinyurl.com/APA-P2024-0328 and by phone: 1-415-527-5035, Access Code: 2824 413 0496.

Any person or public agency entitled to individual notice pursuant to 9 NYCRR §576.5(d)(2) and, at the discretion of the Agency or its hearing officer, any other persons or public agencies, may participate in the hearing. Any person is invited to make a comment on the proposal during the hearing.

Requests for translation services, interpreter services, and any other requests for reasonable accommodations will be made available, at no charge, upon written request at least five days prior to hearing date.

All comments received by the close of the hearing become part of the record and will be considered prior to any determination on the variance. Submit any written comments to or request variance information from **Benjiman J. Amos**, Environmental Program Specialist via e-mail at RPcomments@apa.ny.gov. Additional information is available at www.apa.ny.gov.

October 15, 2026
DATE

John M. Burth
Deputy Director, Regulatory Programs
Adirondack Park Agency

P.O. Box 99 | 1133 State Route 86 | Ray Brook, NY 12977 | Tel: (518) 891-4050 | www.apa.ny.gov

Project Site for APA Variance P2024-0328

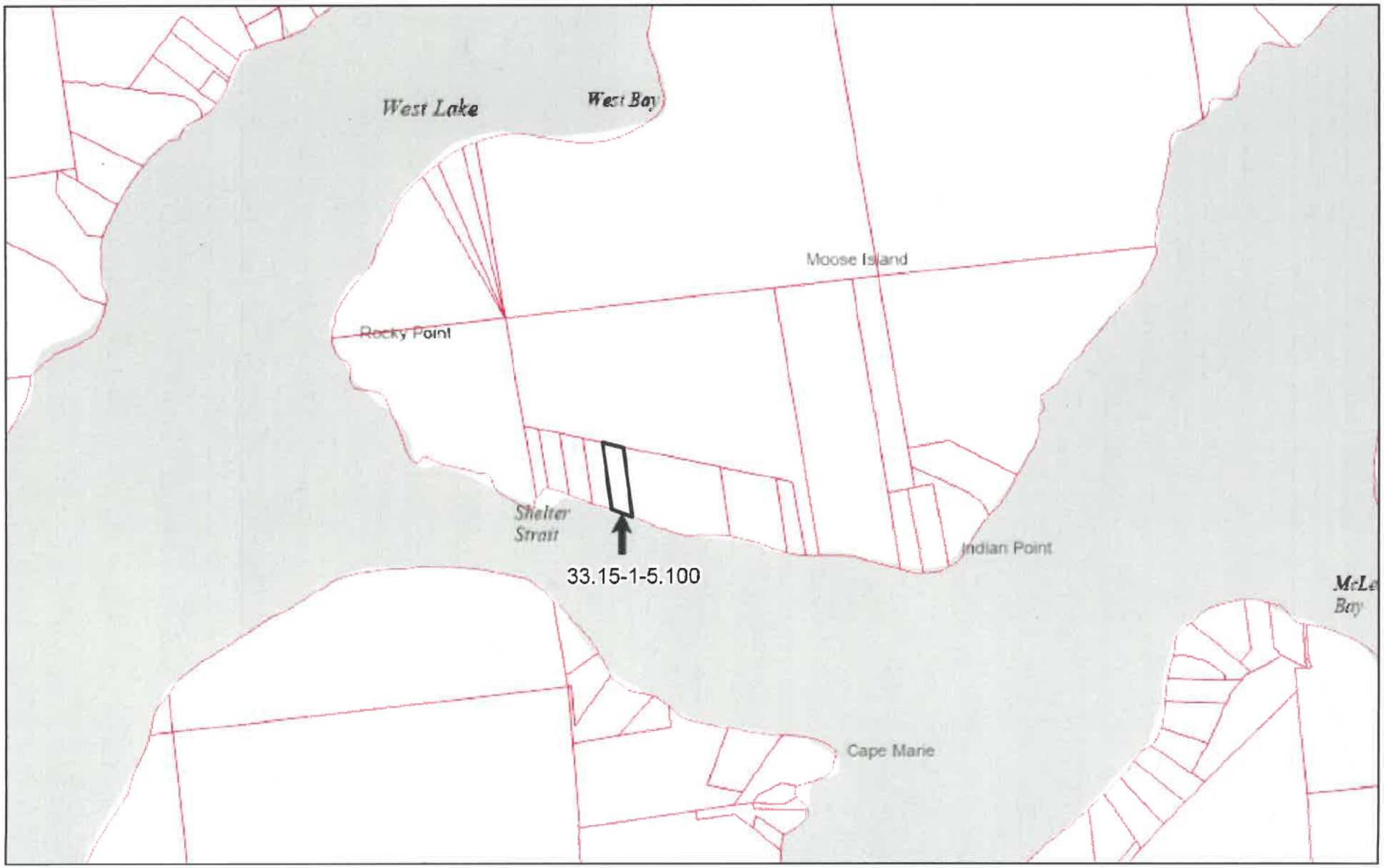

9/14/2026, 11:11:52 AM

0103

1:16,127

0 0.1 0.2 0.4 mi

0 0.15 0.3 0.6 km

NYS Adirondack Park Agency

Drama

Continued from page A1

through having to play different characters on stage and see through different perspectives.

"Getting to be someone else and test out new ways of thinking, new ways of acting, new ways of speaking, it really makes you think about who you are when you're not on stage," Cash said.

Her character in this play is an old woman who acts crazy, but is in reality a bit of a mastermind. The element of age in the play has been a particular challenge for Cash. It means she has to think about every movement that she makes and how she holds herself on stage.

"It just adds a whole new layer of thinking to what I'm already doing," she said.

Avory Lamoy, also a 12th grader, has participated in theater for six years at the Middle High School. She said that performing a comedy from many decades ago has been a fun challenge. Some of the language, especially where there is a play on words, can sometimes go over people's heads.

"I know me and a few other people have definitely had lightbulb moments that are like 'Oh, that is supposed to be funny,'" Lamoy said.

Or in Cash's words, "the humor is so dry that you really have to look for it."

That said, the play still feels strikingly relevant. The odd joke about politics, for instance, quipping that people elect horrible politicians to Washington to keep them out of their state, still earns a laugh. So does the somewhat meta humor about the lunacy of writing and acting in plays.

Lamoy plays Miss Willie, a nurse at the mental institution where the story takes place. She said she's learned that she is good at being serious on stage and so the biggest challenge for her has been acting more bubbly and energetic. Her favorite part of this year's show has been the process of learning one last play alongside students she's collaborated with in many shows.

"We've all worked so extraordinarily hard, and we're so proud of what we've done," Lamoy said. "If people would come out and watch it, it would mean the absolute world to everyone that was involved."

PHOTO BY GRACE MCINTYRE

PICTURED AT RIGHT: From left, Issac Faulkner, Charles Rumble and Echo Staves rehearse a scene from The Curious Savage at Lake Placid Middle/High School on Tuesday.



Village of Lake Placid passes year-long BESS moratorium

BY CHRIS GAIGE

LAKE PLACID — The Lake Placid Village Board voted at its Tuesday, Oct. 20 meeting to adopt a year-long moratorium on battery energy storage systems.

The local law's language is identical with the North Elba Town Board's moratorium that it passed on Oct. 13. The two governments held a joint public hearing on it earlier that evening. The town's vote was 5-0 and the village's was 4-0, with trustee Katie Brennan absent from the meeting.

The town and village share a comprehensive plan, planning board, land use code and code enforcement, though land use regulations can vary between different districts the town and village are divided into. These take into account, among a myriad of other factors, population density.

While the town has been approached with two BESS proposals, both in Ray Brook, Lake Placid Mayor Art Devlin said the village hasn't had any come forward so far.

Officials at the public hearing said the moratorium wasn't a permanent solution to BESS, nor a hostility to green energy, but that the current code does not adequately address the relatively new technology. Town Supervisor Rick Preston said the boards need time to better study the issue, and likely draft code revisions that would regulate it.

He felt one year would be enough time, though the boards could vote to extend the moratorium if they feel additional time is needed.

SNOWLIAGE SCENES AROUND LAKE PLACID FOLLOWING FIRST SNOWFALL



CHRIS GAIGE

The Sentinel Range is seen behind the Lake Placid Club on Saturday, Oct. 17

BY CHRIS GAIGE

LAKE PLACID — A strong cold front pushed through the region late last week. When the sun finally came out, the Adirondack mountains showed off one of their most short-lived, but iconic phases of the calendar year: snowliage.

The phrase is self-explanatory; snow up high and fall foliage — fleeting but still around in glimpses — below.

Wanted to Buy

Wanted To Buy
Pre-1980 Highway signs that say Welcome to Lake Placid Home of the 1932 Winter Olympics. **518-668-0229**

ESSEX COUNTY LEGAL NOTICE

NOTICE OF VARIANCE HEARING
Project Number 2024-0328

ADIRONDACK PARK AGENCY HEARING ON VARIANCE FROM APA ACT SHORELINE RESTRICTIONS on application of Peter & Kim Holderied for a variance in the Town of North Elba, Essex County in a Rural Use area on the APLUDP Map; tax map # 33.15-1-5.100; involving replacement and expansion of a non-conforming dock measuring 28.5 feet in width with a dock measuring 31.5 feet in width to accommodate two 10-foot-wide boat slips.

Hearing on November 4, 2026, at 01:00pm at New York State Adirondack Park Agency Headquarters; accessible on the web https://tinyurl.com/APA-P2024-0328; and on phone: 1-415-527-5035, Access Code: 2824 413 0496.

Any party entitled to individual notice pursuant to 9 NYCRR § 576.5 and, at the discretion of the Agency or its hearing officer, any other persons or public agencies, may participate. Any person is invited to make a comment on the proposal during the hearing.

Requests for translation services, interpreter services, and any other requests for reasonable accommodations will be made available, at no charge, upon written request at least five days prior to hearing date.

Comments can be submitted by close of hearing to RPcomments@apa.ny.gov. Additional information at www.apa.ny.gov.

Looking to get a job done?
PRODUCTS • REPAIR • SERVICES

A CUT ABOVE
Tree Maint. & Removal
34 Yrs. Adk. Experience
acutabovetreelp.com
518-524-4415

ALLEN MOODY LANDSCAPING & TREE SERVICE
Clean-up • Retaining Walls
Paver Stone • Tree Removal
Fully Insured • Free Estimates
518-891-9138 or 637-1799

C&G CUSTOM CARPENTRY
interior/Exterior Rustic
and General Carpentry
Kitchen & Bath Remodeling
Fully Insured • Free Estimates
CGcustom1@gmail.com
518-536-6058

COCHRAN CONTAINER SVC
Dumpster Rentals
Renovation, Construction, Residential,
Roll-off Dumpsters & Demolition
www.AdirondackDumpsters.com
Doug 518-891-5721 or 637-1488

DUFF'S DUMPSTERS
Residential & Commercial
Dumpster Rentals
Residential Trash Service
Call or Text 518-524-6920

FIREWOOD
~ Hotfoot Firewood ~
Split & Delivered
John Snyder
518-891-3707 or 637-6680

FRENCH HILL HEATING & COOLING
We provide quality service and
new installations for all of your
heating & cooling needs in the Adks!
518-524-5631

FURNITURE RESTORATION
Adirondack Furniture
Stripping & Refinishing Furniture
Repair Brass & Metal Polishing
Floor Sanding & Finishing
518-483-7897
Pick-up and Delivery Available

HOME HEALTH CARE
North Country Home Svcs Provides home health care & supportive svcs to clients enabling them to remain as independent as possible in the comforts of their home.
www.nchs.net
Call Today 800-273-2641

IRVINE PLUMBING & HEATING
For All Your Plumbing & Heating Needs
Serving the Tri-Lakes & Beyond
Free Estimates/ Fully Insured
Call 518-323-5297

NORTHERN EXTINGUISHERS A FIRE SAFETY LLC
Fire Extinguishers / Sales & Svc.
19 John Peria Rd.,
Saranac Lake, NY 12983
518-891-2023

NORTHERN LIGHTS TAXI & DELIVERY SERVICES
Offering local and out-of-town
trips and local deliveries at a
reasonable rate. Call today to
book a ride or get a quote.
518-897 -9741

SOOTBUSTERS
Chimney, Masonry &
Stove Svc. Insured &
Certified Cond. reports
Inspections w/video
capabilities Wood, Pellet,
Gas Insert Sales &
Svc. 35' & 55' Bucket Truck
SootBusters.co
sootbustersap@gmail.com
518-359-9765

TREE SERVICE
Joseph VanGelder- Owner/Climber
Removals • Pruning
Stump Grinding
in the Tri-Lakes Area
Free Estimates - Fully Insured
518-888-5797

TREEBUSTERS
Danger tree needs; lot, brush, storm clean-up
excavating, backhoe svc.; 35' & 95' bucket
trucks self loading grapple dump truck;
chipper; tree climbers
Tree Busters.co
treebusters@gmail.com
518-359-9765

Advertise your business or service in every edition of the Adirondack Daily Enterprise and the Lake Placid News for as little as $1.96 per run. ($55.00 base every 4 weeks, 28 run minimum also includes the web.)
Your customers will know how & where to get in touch with you 7 days a week! Any heading available.
Deadline – Friday at 4PM. * $1.96 per run for 3 lines; 25¢ each additional line per run, 28 run minimum.
Runs 24x in the Adirondack Daily Enterprise, 4x in the Lake Placid News. 4 weeks on the web. For further information, call
Adirondack Daily Enterprise 518-891-2600 Lake Placid News

ESSEX COUNTY NOTICE OF FORMATION OF A LIMITED LIABILITY COMPANY

Notice of formation of Placid Security, LLC. Articles of Organization filed with the Secretary of State of NY (SSNY) on 05/23/2026. Office location: Essex County. SSNY designated as an agent of Limited Liability Company (LLC) upon whom process against it may be served. SSNY should mail process to Kevin Geil: 17 Essex Street, Lake Placid, New York 12946. Purpose: Any lawful purpose.

ESSEX COUNTY NOTICE OF FORMATION OF A LIMITED LIABILITY COMPANY

Notice of formation of WILMINGTON MIKEY LLC. Articles of Organization filed with the Secretary of State of NY (SSNY) on 10/07/2026. Office location: Essex County. SSNY designated as an agent of Limited Liability Company (LLC) upon whom process against it may be served. SSNY should mail process to WILMINGTON MIKEY LLC: 74 Colden Ave, Lake Placid, NY 12946. Purpose: Any lawful purpose.

ESSEX COUNTY NOTICE OF FORMATION OF A LIMITED LIABILITY COMPANY

NOTICE OF FORMATION of **TAWA LLC**. Arts. Of Org. filed with SSNY on **09/08/26**. Office Location: **Essex** County. SSNY designated as agent of LLC upon whom process against it may be served. SSNY shall mail a copy of process to: **TAWA LLC**, 2022 Saranac Ave, Lake Placid 12946. Purpose: to engage in any lawful act.

ESSEX COUNTY NOTICE OF FORMATION OF A LIMITED LIABILITY COMPANY

Notice of Formation of 1026 NYS ROUTE LLC. Arts. of Org. filed with Secy. of State (SSNY) on 9/3/26. Office location: Essex County. SSNY designated as agent of LLC upon whom process against it may be served. SSNY shall mail process to: c/o LLC, 932 North Road, Greenwich, NY 12834. Purpose: any lawful activity.

See Proof on Next Page

AFFIDAVIT OF PUBLICATION

Lake Placid News
2345 Maxon Road Extension, Lake Placid, NY, NY 12308
(518) 730-4551

State of Florida, County of Orange, ss:

I, Anjana Bhadoriya, of lawful age, being duly sworn upon oath depose and say that I am an agent of Column Software, PBC, duly appointed and authorized agent of the Publisher of Lake Placid News, a Weekly newspaper of general circulation, printed and published in Lake Placid, NY, New York, designated by the County Clerk of Essex County as a newspaper of record; that the publication, a copy of which is attached hereto, was published in the said newspaper on the following dates.

Publication Dates:

- Oct 23, 2026

Notice ID: nE48PFUZ2eXWgzBxVUL1

Notice Name: NOVH P2024-0328

Publication Fee: $80.72

_____
Agent

VERIFICATION

State of Florida
County of Orange

Signed or attested before me on this:

_____
Notary Public

ESSEX COUNTY
LEGAL NOTICE

NOTICE OF VARIANCE HEARING
Project Number 2024-0328

ADIRONDACK PARK AGENCY HEARING ON VARIANCE FROM APA ACT SHORELINE RESTRICTIONS on application of Peter & Kim Holderied for a variance in the Town of North Elba, Essex County in a Rural Use area on the APLUDP Map; tax map # 33.15-1-5.100; involving replacement and expansion of a non-conforming dock measuring 28.5 feet in width with a dock measuring 31.5 feet in width to accommodate two 10-foot-wide boat slips.

Hearing on November 4, 2026, at 01:00pm at New York State Adirondack Park Agency Headquarters; accessible on the web https://tinyurl.com/APA-P2024-0328; and on phone: 1-415-527-5035, Access Code: 2824 413 0496.

Any party entitled to individual notice pursuant to 9 NYCRR § 576.5 and, at the discretion of the Agency or its hearing officer, any other persons or public agencies, may participate. Any person is invited to make a comment on the proposal during the hearing.

Requests for translation services, interpreter services, and any other requests for reasonable accommodations will be made available, at no charge, upon written request at least five days prior to hearing date.

Comments can be submitted by close of hearing to RPcomments@apa.ny.gov. Additional information at www.apa.ny.gov.